City of Rapid City

INFRASTRUCTURE DESIGN CRITERIA

2008 EDITION

City of Rapid

Infrastructure Design Criteria

Table of Contents

Section One – General Requirements

Section Two – Streets and Right-of-Way

Section Three – Water and Wastewater Utilities

Section Four - Stormwater

Section Five - Grading

CITY OF RAPID CITY

INFRASTRUCTURE DESIGN CRITERIA

SECTION ONE

GENERAL REQUIREMENTS

Section One - General Requirements

1.1 Intent

The Design Criteria Manual summarizes and outlines policy, methods, practice, procedures, and design standards utilized by the City of Rapid City (City). The criteria are adopted to obtain consistency in the design and development of infrastructure, for both public improvements and private developments, in the City of Rapid City.

These Criteria, in conjunction with the City's Standard Specifications for Public Works Construction (Specifications), are intended to protect the public health, safety, and welfare, in the provision for and maintenance of public improvements within the City. The Criteria apply to the comprehensive design and construction of all public improvements associated with developing, redeveloping and subdividing lands and provides necessary criteria for all drainage, right-of-way, transportation, and utility services design within the City of Rapid City.

The intent of the Manual is to publish design criteria that are in compliance with all applicable laws. Where the criteria are found to be out of compliance with any applicable statute or law, the City will revise the criteria as necessary.

The design criteria provide design guidance and the specifications provide construction practices.

1.2 Scope

The City will review, approve, and monitor the design and construction of all public improvements within existing or proposed public right-of-way or public easements to ensure compliance with the Criteria and Specifications. The City has the sole authority for approving and accepting any public improvement.

1.3 Jurisdiction

These Criteria, along with the Specifications, shall apply to all public improvements within the incorporated area of the City of Rapid City and the three mile jurisdictional limit, except where the Criteria are superseded by Federal or State requirements.

1.4 Sections

1.4.1 **General Requirements –Section One:** These Criteria apply to all the sections contained in this Design Criteria Manual.

1.4.2 **Streets and Right-of-Way – Section Two:** The street and right of way criteria prescribed in Section Two provide for the study, design, and construction of site accesses, streets, sidewalks, bicycle facilities, and trails.

1.4.3 **Water and Wastewater Utilities – Section Three:** The utility criteria prescribed in Section Three, provide for the study, design, and construction of water and wastewater service facilities. These criteria detail required forecasting for sizing water distribution and wastewater collection mains, and requirements for ensuring public health standards are met, and requirements for installing domestic water and sewer service lines.

1.4.4 **Storm Water – Section Four:** The storm water criteria prescribed in Section Four, provide for the study, design, and construction of storm water drainage and flood control improvements. Detention ponds, storm sewer and drainage way systems, water quality, and erosion control measures may be required part of construction approval to mitigate the impact of increased runoff resulting from land development or change in land use.

1.4.5 **Grading – Section Five:** Grading Criteria are provided in Section Five.

1.4.6 **Right of Way Management:** The criteria for the management of City Rights of Way are provided as part of Section Two.

1.4.7 **Landscaping and Parking Lots:** These criteria are covered in another portion of the City code.

1.5 Minimum Criteria

1.5.1 These Criteria prescribe the minimum requirements to be met or exceeded when designing all public improvements. Whenever the criteria are found to be inconsistent with any other adopted standards, regulations, or codes, the more restrictive standards, regulations, or codes shall control. Reference to any code, regulation, standard, criterion, or manual of any technical society, organization, or association, or to any law or regulation of any governmental authority, whether such reference be specific or by implication, shall mean the most recently adopted or current law, code, regulation, standard, criterion, or manual in effect at the time of City approval of the design documents for any project.

1.5.2 The design of all public improvements with a construction value in excess of Fifty thousand dollars ($50,000) shall be prepared by or under the direct supervision of a Professional Engineer duly registered and licensed by the State of South Dakota.

1.6 Using these Criteria

These Criteria are to be used when designing all public improvements and infrastructure within the City. For the purpose of this document, public improvements and infrastructure include, without limitation, all improvements intended for public purposes or for the benefit of the community, located within dedicated public rights-of-way and public easements. Construction and material requirements for infrastructure are provided in the Specifications.

1.7 Public Improvements Design

These Criteria prescribe minimum requirements for designing adequate and functional public improvements. However, the design of public improvements also depends on the land use zoning and comprehensive planning requirements for the City, as well as the specific site geography of the land to be improved or developed. The City review for acceptance of submitted design plans for public improvements occurs as part of the development review process that distributes design applications to staff in multiple departments, divisions, and agencies. The Growth Management Department, development review staff, has the primary responsibility to coordinate the review and approval of construction plans for public improvements in developments.

1.8 Construction Approvals

1.8.1 An applicant seeking approval to construct public improvements in the City shall develop engineering designs and construction plans that comply with City design and construction criteria. In addition to complying with these Criteria, an applicant shall file the necessary applications and meet the requirements of the City's land use regulations, permit standards, and fee assessments. All necessary permits and approvals shall be obtained prior to beginning construction.

1.8.2 An applicant seeking construction approval shall consult all relevant local master plans and determine the location of existing public infrastructure while developing specific project designs.

1.9 Revisions to this Manual

1.9.1 Criteria may be amended from time to time, as determined by the City.

1.9.2 Revisions to this Manual shall be issued in writing and can be made only by the City.

1.9.3 Minor changes or modifications shall be summarized in errata sheets and will be distributed as necessary.

1.9.4 Major changes affecting policy, criteria, methodologies, or engineering data shall be distributed as addenda or as replacement pages after the changes are adopted. The City will make every reasonable effort to transmit these changes electronically to all holders of the criteria manual.

1.9.5 Users requesting changes to the criteria in this Manual shall provide detailed comparative engineering data supporting the reasons and justifications for the change.

1.9.6 A manual user must provide the City with their current mail or e-mail address in order to receive criteria changes.

1.10 Exceptions

The Public Works Director and the Growth Management Director may, jointly, grant exceptions to these Criteria, in accordance with resolution adopted by the City Council.

1.11 Related Documents

1.11.1 Information regarding design of public improvements is also contained in the following related documents. The designer shall become familiar with these and other documents.

- City of Rapid City Municipal Code
- City of Rapid City Standard Specifications for Public Works Construction

1.11.2 Conflicts between the Specifications and these Criteria, relating to design requirements shall be resolved in favor of these criteria. Materials or construction requirements shall be resolved in favor of the specifications. Questions regarding conflicts shall be referred to the City Public Works Director or the Growth Management Director as appropriate.

1.12 Terminology

Terms, words, and abbreviations used in these Criteria are defined in the Glossary.

1.13 Submittal Requirements for Construction Approval

Submittal requirements outlined in this section are focused toward the submittal of applications for subdivision development. Submittal requirements for City managed, funded, or sponsored projects are contractually specified in the design agreements between the City and the Design Engineering firm. The City/Engineering firm contractual requirements shall, at a minimum, meet the following submittal standards.

1.14 Documentation

An applicant for construction approval shall submit required engineering reports, rights-of way and easement dedications, ancillary permits and agreements, and construction plans in compliance with these Criteria. Construction approvals are subject to the City's review, and acceptance.

1.14.1 Prior to approving construction plans, the City shall require an applicant to submit the following documentation as appropriate:

1) Engineering reports

2) Rights-of-way and easements as proposed or as existing

3) Permits and agreements as proposed.

1.14.2 Prior to the final acceptance of public improvements, the City will require an applicant to submit the following documentation:

1) As-built drawings

2) Testing results

3) Inspection approvals

4) Financial guarantees and warranties

1.15 Engineering reports

1.15.1 Engineering reports required for construction approval shall be prepared as follows:

1) In compliance with these Criteria.

2) Under the direct supervision of a Professional Engineer.

3) Each report shall contain adequate information to evaluate the submitted findings and designs, including calculations, details, and references.

4) Engineering reports required for construction approval of a project are the following:

5) Geotechnical Soils Report, which provides geotechnical conditions and design requirements based on soils investigation and testing and geologic site conditions in compliance with standard engineering practices for soil mechanics and groundwater analysis.

6) Pavement Design Report, which provides geotechnical soils conditions and adequate pavement design requirements and structural cross-sections for roadway construction.

7) Storm Water Report, which addresses storm water conditions, impacts, and design requirements in compliance with Section four.

8) Utility Report, which addresses water and wastewater utilities service impacts, demands, and design requirements in compliance with Section three.

9) Traffic Study, which identifies traffic impacts from proposed developments or roadway modifications and proposes transportation design requirements and mitigation measures in compliance with Section two.

1.15.2 The City's acceptance of a technical report is not a certification of the accuracy of data or calculations in the report.

1.15.3 An applicant for construction approval shall submit not less than four or more than six copies of any required engineering report to the City for review and acceptance. After acceptance, a City acceptance stamp, signed and dated by the City, will be placed on each copy of the report. The City will retain two copies as record sets, one copy as a field copy for construction inspection, and the remaining copies will be returned to the applicants Engineer.

1.15.4 Engineering report approval expires 2 years following the date of acceptance, unless substantial construction of improvements under the report has been initiated.

1.16 Rights-of-Way and Easement Dedications, Permits, and Agreements

1.16.1 Rights-of-way and easements required for construction approval shall be described by a Land Surveyor registered by the State of South Dakota and dedicated by subdivision platting or by a separate legal instrument that describes a specific legal description of the dedication.
Agreements required for construction approval shall be executed and may include, without limitation:

1) Development agreement

2) Public improvements agreement

3) Public improvements extensions agreement

4) Subdivision agreement

5) Utility over sizing reimbursement agreement

1.16.2 The applicant is responsible for identifying and securing all permits necessary for construction. Permits required for construction acceptance shall be of "approved and issued" status and may include without limitation:

1) City of Rapid City Flood Plain Development Permit
2) City of Rapid City Right to Work Permit
3) City of Rapid City Air Quality Permit
4) City of Rapid City Grading Permit
5) City of Rapid City Blasting Permit
6) City of Rapid City On-Site Wastewater Permit
7) South Dakota Department of Transportation Access Permit
8) South Dakota Department of Transportation Utility Permit
9) Railroad Right-of-Way License
10) South Dakota DENR Utility (water and sewer) Approval Letter
11) State of South Dakota Storm Water Discharge Permit
12) United States Corps of Engineers 404 Permit
13) Other permits as may be applicable

1.17 Construction Plans

All construction plans shall meet the City's minimum drawing standards to ensure legibility and consistency; to facilitate review, construction, and public inspection; and to provide a clear public record.

1.18 Submittal and Acceptance of Construction Plans and Drawings

1.18.1 Submittal: An applicant, who wishes to obtain City acceptance and begin construction, shall submit not less than four or more than six drawing sets of any required construction plans to the City for review including:

1) Black-lined or blue-lined drawing set prepared by a Professional Engineer and signed, sealed, and dated by the Professional Engineer. The plan sets submitted for review may contain a statement that the plans are for review only or not for construction
2) The City will review the submittal and provide comment.

1.18.2 All submittals (drawings and specifications) believed by the Professional Engineer to be final shall contain a Certification Statement of Conformance with City Standards, which shall read, "I *(insert Profession Engineer's name)* Certify that I have read and understand the provisions contained in the City of Rapid City Standard Specifications for Public Works

Construction, current edition and the City of Rapid City's adopted Design Criteria Manual. The drawings and specifications contained here within to the best of my knowledge were prepared in accordance with these documents". This statement shall appear on the title sheet of all drawings and on the first page of specifications after the cover sheet.

1.18.3 Acceptance: The City will review construction plans for compliance with these Criteria. If acceptable:

1) The applicant shall submit a Mylar or vellum drawing set of the accepted drawing set prepared by a Professional Engineer and signed, sealed, and dated by the Professional Engineer. In addition an electronic copy of the drawing set in accordance with the Drafting Standards shall be submitted.

2) The applicant shall address all City comments from previous submittal review and identify all modifications not shown on the previous submittals

3) A City acceptance stamp signed and dated by the City will be placed on each drawing sheet of the accepted construction plans.

4) The original accepted drawing set shall be returned to the applicant.

5) Drawing sets will be maintained on file with the City as the record set of the construction plan approval documents and for use by the City.

6) Applicant must receive approval from SDDENR prior to beginning construction.

7) Submitted designs must be completed to the proper completion level or they will be returned without review. As an example, if the submittal is intended to be as a review of the final design, but the submitted plans are only partially complete, they will be returned without review.
8) Submittals that are not in substantial compliance with the Criteria and Specifications established by the City may be rejected for revision without detailed review comment.

9) The City of Rapid City's review is for general compliance with the City of Rapid City Criteria and Specifications. The City of Rapid City, through the acceptance of the plans or reports, assumes no responsibility for the completeness and/or accuracy of the plan or report

1.18.4 Effective Period: Construction plan acceptance expires 2 years following the date of acceptance, unless substantial construction has been initiated. An applicant for construction acceptance may resubmit the construction plan for reacceptance, subject to review for compliance with standards in effect at the time of resubmittal.

1.18.5 Errors and Omissions: The Professional Engineer shall be responsible for the completeness and accuracy of the construction plans or drawings.

1.18.6 As-Built Drawings

1) Requirements: As-built drawings reflect the actual in-place construction of public improvements. The applicant shall submit as-built drawings for final construction acceptance prior to City acceptance of any public improvements.

2) Preparation: As-built drawings shall be prepared by the Professional Engineer Drawings shall be prepared as follows:

   a) In compliance with the requirements in the Drawing Standards.

   b) Based on completed field inspections, accurate measurements, survey data, and testing results, materials, and equipment records.

   c) To reflect any variations from the accepted construction plans in the public improvements actually constructed.

1.19 Transfer of Responsibility

If the Professional Engineer responsible for the preparation of the original construction plans is replaced prior to preparing as-built drawings, the replacement Professional Engineer shall agree in writing to accept the responsibility for the design certified by the original Professional Engineer, prior to City acceptance of the constructed public improvements.

1.20 As-Built Drawings

1.20.1 Submittal

An applicant for construction acceptance shall submit as-built drawings to the City. As-built drawing sets shall contain the following:

1) A Mylar or velum drawing set of the as-built drawing set prepared by a Professional Engineer and signed, sealed, and dated by the Professional Engineer. In addition an electronic copy of the drawing set in accordance with the Drawing Standards shall be submitted.

2) All test reports, material certifications, material and equipment submittals, operation and maintenance manuals, and other items required by ordinance and specification for acceptance shall be submitted with the as-built drawings.

3) When the responsible Professional Engineer has been responsible for complete construction phase services on the project, he shall then state on the drawing set cover sheet: "I hereby affirm that the public improvements for (Name of Subdivision or project) have been constructed in substantial compliance with the construction plans and specifications accepted by the City of Rapid City."

1.20.2 Acceptance

1) The City will review the as-built, Mylar or vellum drawings for general compliance with the City submittal and Drawing Standards. If acceptable, a City received stamp, signed and dated by the City, will be placed on each drawing sheet of the as-built drawings. The Mylar drawing set will replace the accepted construction drawing set and will be maintained on file with the City as the accepted as-built drawings set.

2) The City will not accept any construction, place in service, release financial guarantees, or issue utility connections for any public improvements for which acceptable as-built drawings have not been submitted.

1.21 Modifications

Public improvements shall be constructed in accordance with accepted plans. Modification of accepted plans will not be made without prior authorization by the City.

1.22 Variations and Discrepancies

If any substantial variations or discrepancies, particularly with respect to location, design slopes, grades, dimensions, and clearances, the Professional Engineer shall recommend a solution or alternative solutions to the City for review and acceptance. If no proposed alternative will satisfy the requirements of these Criteria, the applicant shall reconstruct the deficient public improvements to comply with the accepted construction plans.

1.23 Alternative Materials and Methods of Construction

These Criteria are not intended to prevent the consideration of any material or method of construction not specifically prescribed in these Criteria, provided that the alternative material or method of construction have been approved in writing and their use authorized by the City. The City may approve an alternative material or method of construction on a case by case basis, provided the proposed design is at least the equivalent in suitability, strength, effectiveness, durability, safety, and sanitation to the standard set in these criteria.

GLOSSARY

DEFINITIONS

Wherever used in this manual, the following terms shall have the meanings indicated which shall be applicable to both the singular and plural thereof;

Applicant – Entity submitting application for development.

Bonds – Bidding, Performance and Maintenance Bonds, and other instruments of security, furnished by the applicant and his surety.

Building Code – Code as adopted by the City of Rapid City.

Building Official – The designated authority charged with the administration and enforcement of the building code as adopted by the City of Rapid City.

Chief – The Fire Chief or his designee.

City Engineer – The Director of Public Works or his designee, for purposes of this manual.

DENR – The South Dakota Department of Environment and Natural Resources.

Director – The director of Public Works or his designee.

Drawings – The part of the submittal documents, which shows the characteristics and scope of the Work to be performed and which have been prepared or approved a Professional Engineer.

Engineer of Record – Engineer providing design and/or construction management services. Engineer responsible for the content of the design drawing and specifications. Engineer whose stamp is on the design drawings and specifications.

Fire Code – The International Fire Code as adopted by the City of Rapid City.

Laboratory – A testing facility, designated to investigate, test, report and assure the quality of materials and equipment being incorporated in the work conforms to that specified in the Criteria and Specifications.

Land Surveyor – A person registered as a Land Surveyor by the State of South Dakota.

Mobile Home Park or Trailer Park – Any area or tract of land where space is rented or held-out for rent, or occupied by two or more mobile homes.

Mobile Home – A trailer or vehicle, with or without motive power, designed and constructed to travel on the public thoroughfares and designed or used for human habitation.

On-site Wastewater Treatment Facility – A sewage treatment system, or part thereof, serving a dwelling, or other establishment, or group thereof, and using sewage tanks

followed by soil treatment and disposal or using advanced treatment devices that discharge below final grade. Onsite wastewater systems include holding tanks, subsurface sand chambers, "No-dak" systems, and vault privies.

Ordinance –The City of Rapid City Municipal Code.

Owner – The person or entity that holds ownership to the components of a project. For City of Rapid City managed, funded, or sponsored projects, the Owner is the City of Rapid City.

Plumbing Code – Code as adopted by the City of Rapid City.

Private Fire Protection System – Hydrants, valves, water lines and appurtenances, sprinkler systems, hose connections, and other equipment constructed for the purpose of providing fire protection for a particular building or group of buildings and supplied with water from a public water supply system. Private Fire Protection Systems are located on private property, although some components may be located in public ROW, and are owned, operated, and maintained by the owner(s) of the property being served.

Private Sewer Collection System – Manholes, sewer piping and appurtenances constructed for the purpose of collecting wastewater from multiple buildings. Private Sewer Collection Systems are located on private property, although some components may be located in public ROW, and are owned, operated, and maintained by the owner(s) of the property being served.

Private Storm Water System – Piping and appurtenances constructed for the purpose of collecting, conveying or storing storm water. Private Storm Water Systems are located on private property, although some components may be located in public ROW, and are owned, operated, and maintained by the owner(s) of the property being served.

Private Street System – Street and access approaches constructed for the purpose of conveying traffic. Private Street Systems are located on private property, although some components may be located in public ROW, and are owned, operated, and maintained by the owner(s) of the property being served.

Private Water Distribution System – Water piping and appurtenances constructed for the purpose of supplying water to multiple buildings. Private Water Distribution Systems are located on private property, although some components may be located in public ROW, and are owned, operated, and maintained by the owner(s) of the property being served.

Professional Engineer or P.E. – A person registered as a Professional Engineer by the State of South Dakota. Engineer providing design and/or construction management services.

Public Improvement – Means any public facility, system or infrastructure in the City of Rapid City jurisdictional area including, but not limited to: earthwork or landscaping, streets, sidewalks, bike paths, trails, parking and traffic control devices; water supply, treatment, storage and distribution systems; wastewater collection and treatment systems; and storm water and flood control collection and conveyance systems in proposed or existing public easements or right-of –way.

ROW – Public right-of-way.

Standard Specifications – "City of Rapid City Standard Specification for Public Works Construction", current edition.

Ten States Standards – "Recommended Standards for Water Works" when cited in reference to water distributions systems, and "Recommended Standards for Wastewater Facilities" when cited in reference to sewer collection systems, both by the Great Lakes - Upper Mississippi River Board of State and Provincial Public Health and Environmental managers, as amended by the DENR.

ABBREVIATIONS

Whenever the following abbreviations are used in these Criteria they are to be construed the same as the respective expressions represented.

AASHTO	American Association of State Highway & Transportation Officials
ACI	American Concrete Institute
ACPA	American Concrete Pipe Association
AGC	Associated General Contractors of America, Inc.
AIA	American Institute of Architects
AIEE	American Institute of Electrical Engineers
AISC	American Institute of Steel Construction
ANSI	American National Standards Institute
APA	American Plywood Association
APHA	American Public Health Association
APWA	American Public Works Association
ASCE	American Society of Civil Engineers
ASTM	American Society for Testing Materials
AWSC	American Welding Society Code
AWWA	American Water Works Association
IEEE	Institute of Electrical and Electronic Engineers
NACE	National Association of Corrosion Engineers
NBS	National Bureau of Standards
NCPI	National Clay Pipe Institute
NEC	National Electric Code
NEMA	National Electrical Manufacturer's Association
NFPA	National Fire Protection Association
SDDENR or DENR	South Dakota Department of Environment and Natural Resources
SDDOT	South Dakota Department of Transportation
UL	Underwriter's Laboratories, Inc
USGS	United States Geological Survey
WEF	Water Environment Federation

End of Section

CITY OF RAPID CITY

INFRASTRUCTURE DESIGN CRITERIA

SECTION TWO

STREETS AND RIGHT OF WAY

Section Two - Streets and Right of Way

2.1 Street Classification

These criteria shall govern the planning, design, and construction of all streets within the city of Rapid City and in all areas that are subject to its extra-territorial jurisdiction.

2.2 Definitions

Streets and roads shall be designed, based on the following definitions and anticipated functional classifications:

2.2.1 **Alley:** A public way providing a secondary means of access to abutting properties. Alleys shall no provide the only means of access.

2.2.2 **Arterial Street:** A street serving the highest traffic volume corridors and major centers of activity. Traffic studies and AASHTO standards shall be used to determine the final design criteria for all arterial streets. These streets are designed with limited access to preserve capacity and enhance safety. Locations for arterial streets are as described on the adopted Major Street Plan.

2.2.3 **Collector Street:** A street, which collects traffic from other minor streets and channels it into the arterial street system. Collectors provide for land access and traffic circulation within and between residential neighborhoods and commercial and industrial areas. They distribute traffic movements from these areas to the arterial streets. The cross section of a collector street may vary widely depending on the scale and density of adjacent land uses and the desired character of the local area. Left turn lanes should be considered on collector streets adjacent to nonresidential development.

2.2.4 **Commercial Street:** A street intended primarily to facilitate the movement of automobiles and other goods carriers into and within a commercial development area.

2.2.5 **Cul-de-sac:** A street having one end connecting to the street system and having one closed end terminated by a turnaround.

2.2.6 **Expressway:** A street that is similar to a freeway, but can include some at-grade intersections at cross-streets. Access may be either fully or partially controlled with small amounts of direct land access. Expressways are intended to provide high levels of mobility, rather than to provide local property access.

2.2.7 **Freeway:** A divided, limited access facility with no direct land access and no at-grade crossings or intersections. Freeways are intended to provide the highest degree of mobility serving higher traffic volumes and longer-length trips.

2.2.8 **Industrial Street:** A street intended primarily to facilitate movement of large trucks or other goods carriers into and within an industrial or development site.

2.2.9 **Lane/Place:** A street serving a residential site of not more than twelve (12) dwellings, whose purpose is to provide primary access to abutting properties and to move traffic generated from abutting properties to nearby streets.

2.2.10 Local (Residential) Street: A street serving a residential site of more than sixty (60) dwellings, whose purpose is to provide direct access to abutting property and to move traffic to collector and other major streets.

2.2.11 Private Street: A street for which access and use are limited to a group of private individuals, however the street maintains access for authorized public vehicles. The street shall be built to City street criteria and shall be placed on a public or private access easement. Private streets do not include private parking lots, access thereto, or commercial or industrial driveways.

2.2.12 Rural Road: A street providing a means of direct and indirect access to abutting property, but having no curb and gutters at the edges of the traveled way Rural roads, generally, require parallel roadside drainage ditches to transmit surface drainage. Driveway approaches, generally, require cross culverts to maintain ditch flow. Rural roads shall be shall be classified and built according to City Street Criteria.

2.3 Minimum Right-of-Way/Pavement Widths

Right-of-way and street pavement widths shall be based on street classifications and parking requirements as provided in Figure 2-1.

2.4 Moderate/High/Extreme Fire Hazard Areas

In Moderate/High/Extreme Fire Hazard Areas, as defined by the Rapid City Fire Department, Lane/Place streets shall provide minimum right-of-way and pavement widths equal to Local Street requirements. The fire department shall make the necessary determination of the Fire Hazard area when the project is submitted for layout plat approval.

2.5 Private Streets

Private streets shall be built to the same design criteria as public streets, except that private streets shall be located in an access easement. The access easement must clearly state ownership, maintenance responsibilities, provide for access for all necessary City services, and must define who are the allowed users of the private street. Private streets shall not provide the principal access to more than four tracts, parcels, or lots of any size.

2.6 Minimum Access

A street with a single access shall not be used for more than 40 dwelling units. A second access shall be provided when more than 40 dwelling units are accessed from a street. A second access means shall be a natural extension of the street system. The second access shall be configured such that emergency responders and the public have a second route to the property or exit from the property if one route is blocked. The number of dwelling units shall be determined as being the combination of all development(s) gaining access from the street. This requirement shall apply to all developments, including phased projects. No additional development shall be allowed on any street currently exceeding 40 dwelling units, unless a second street access is provided or the Rapid City Council has approved an exception.

2.7 Horizontal/Vertical Alignment

Street alignment should closely fit the existing topography to minimize the need for cuts or fills without sacrificing pedestrian and vehicle safety.

Additional consideration shall be given to providing adequate driveway access to properties adjacent to the street, either through vertical alignment, lot grading, or similar design considerations.

All designs shall be accomplished in accordance with the AASHTO criteria for Low Speed Urban Streets.

2.8 Design Speed

Design speed is selected on the basis of the functional classification of the road. Design speeds shall be in accordance with Table 2-2. Posted speeds for all streets may be at or below the design speeds at the discretion of the City of Rapid City.

TABLE 2-2 Minimum Design Speed for Streets and Roads	
Design speeds may be reduced, at the discretion of the designer, if the terrain is such that the cut/fill section at the top or bottom of vertical curves exceeds twelve (12) feet	
Lane/Place	25 MPH
Local Streets	25 MPH
Collector Streets	35 MPH
Arterial Streets	50 MPH
Expressways	55 MPH
Freeways	As determined by SDDOT

2.9 Street Grade

Street profile grades shall be as flat as is consistently possible with the surrounding terrain while allowing for good drainage.

2.9.1 Local & Lane/Place Streets: For Local and Lane/Place Streets, the maximum normal design street grade shall be twelve percent (12%). The minimum street grade is one half of one percent (1/2%).

2.9.2 Collector Streets: For Collector Streets, the maximum design street grade shall be ten percent (10%) and the minimum street grade is one half of one percent (1/2%).

2.9.3 Arterial Streets: For Arterial Streets, the maximum design street grade and minimum grade shall be as dictated by the AASHTO design criteria, and shall be based on street design speed.

2.9.4 Expressways & Freeways: Grades shall be as dictated by SDDOT and AASHTO.

2.9.5 Cross-slope: Adequate pavement cross-slope is required to provide drainage off the traveled portion of the roadway and into the gutter or ditch. Care should be taken when

using vertical curves, combined with variable profile and cross-slope grades, to provide adequate drainage to prevent ponding or icing conditions. Maintaining drainage is especially critical where super-elevated sections are utilized. Minimum cross-slope shall be two percent (2%). Maximum cross-slope shall be four percent (4%). In varying and hilly terrain, the final design may dictate deviations from the cross-slope criteria. However, maintaining adequate drainage is of tantamount importance.

2.10 Vertical and Horizontal Curves

Geometric design features shall be consistent with the specified design speed. Horizontal and vertical alignment must complement each other and be considered in combination. Adequate stopping sight distances and passing sight distances (when applicable) must be provided. Minimum horizontal and vertical curve radii shall be provided in accordance with the latest edition of the American Association of State Highway and Transportation Officials' A Policy on Geometric Design of Highways and Streets (AASHTO Guidelines). The guidelines for Low Speed Urban Streets shall be used.

2.11 Intersections

The alignment, grade and geometrics of intersecting streets shall provide both drivers and pedestrians with a complete and unobstructed view of approaching traffic and shall enable each of them to make necessary maneuvers to traverse the intersection safely.

2.11.1 Intersecting Angles

Streets should be designed to intersect at ninety degree (90°) angles. The intersecting angle of the streets centerlines shall never be less than sixty degrees (60°).

2.11.2 Intersections on Curves

Intersections on curves are discouraged. For those cases where intersections on curves are unavoidable, minimum sight distances must be maintained.

2.11.3 Street Grade at Intersections

The intersection and approach areas of lesser streets, where they intersect with higher order streets and where vehicles stage while waiting to enter an intersection, shall not exceed five percent (5%) profile grade for a minimum distance of fifty feet (50 ft.) from the near right of way line.

2.11.4 Curb Radii

Intersection curb radii shall comply with Table 2-3. Fillet and pan, curb, and handicapped access ramp construction shall comply with the latest edition of the City of Rapid City Standard Specifications for Public Works Construction.

TABLE 2-3 -- Intersection Curb Radii	
Intersection Type	Minimum Radii from Back of Curb
Local-Local	25 feet
Local-Collector	25 feet
Collector-Collector	25 feet
Commercial-any street	30 feet
Industrial-any street	40 feet
Arterial	40 feet

*Compound curves may be used for Industrial intersections

For streets where on-street parking is not provided, larger curb radii may be required to provide adequate turning clearance.

2.11.5 Distance between Intersections

The distance between intersections shall not be less than 125 feet, unless the minimum approach spacing required in Figure 2-9 dictates a greater distance.

2.11.6 Distance between Intersections and Access Approaches

See Section 2.16 for access approach spacing standards.

2.12 Sight Triangles

The criteria for sight triangles presented in this section are based on the recommendations contained within the AASHTO Guidelines. The figures are presented as general representations of the required sight triangles; it is the responsibility of the designer to verify the applicability of each figure to the facility being designed.

2.12.1 Definitions

1) **Sight triangle:** a specified area at an intersection that is free of any obstructions which may block a driver's view of potentially conflicting traffic. intersecting facilities may include streets, alleys, driveways, rail lines, sidewalks and bicycle paths.

2) **Stop-controlled intersection:** an intersection with traffic control stop signs. Alley, Private Street, and Driveway intersections are considered stop-controlled intersections for the purpose of sight triangle requirements.

3) **Yield-controlled intersection:** an intersection with traffic control "yield" signs.

4) **Signalized intersection:** an intersection with traffic controlled by a traffic signal.

5) **Pedestrian sight triangle:** a specified area at an intersection of sidewalks or bicycle paths that is free of any obstructions, which may block a user's view of potentially conflicting traffic.

6) **Uncontrolled intersection:** an intersection with no traffic control.

7) **Railroad crossing:** the area formed by the intersection of a railroad track with any street, highway, private street, driveway, sidewalk, bike path or alley.

2.12.2 Restrictions

1) **Obstructions:** No obstructions to vision shall be allowed within the applicable sight triangle(s), except as permitted by ordinance. An object shall be deemed an obstruction if it creates a hazard as defined by the AASHTO guidelines.

2) **Multiple sight triangles:** When more than one sight triangle applies to the same corner, all applicable sight triangle requirements must be satisfied.

2.12.3 Point of Measurement: All distances shall be measured from the back of curb or, where there is no curb, from the edge of the pavement or gravel, unless otherwise specified.

2.12.4 Stop-controlled Intersection: Each stop-controlled intersection shall have a sight triangle based on the speed limits of the intersecting streets, except that the intersection of two alleys shall have a sight triangle of twenty-five feet on each leg. See Figure 2-2 for sight triangles at stop-controlled intersections.

2.12.5 Yield-controlled Intersection: See Figure 2-3 and Figure 2-4 for sight triangles at yield-controlled intersections.

2.12.6 Uncontrolled Intersection: See Figure 2-4 and Figure 2-5 for sight triangles at uncontrolled intersections.

2.12.7 Signalized Intersections: Signalized intersections should be considered to be stop-controlled for the purpose of sight triangle requirements. See Figure 2-2.

2.12.8 Pedestrian Sight Triangle: At intersecting sidewalks or bicycle paths, and at any intersection of a sidewalk or bicycle path with a street, alley, or driveway, a ten-foot pedestrian sight triangle shall be maintained. Pedestrian sight triangle legs shall be measured from the intersecting edges of sidewalks or bicycle paths, and the paved or unpaved edge of a street, alley, or driveway. These distances are shown on Figure 2-6.

2.12.9 Railroad Crossings: Sight triangles for railroad crossing shall be in accordance with the AASHTO Guidelines.

2.13 Cul-De-Sac Design

Local or Lane/Place Streets may be designed to have one end permanently closed. Permanent cul-de-sacs in commercial or industrial areas shall be allowed, when they meet all permanent cul-de-sac criteria.

2.13.1 Length: Cul-de-sacs in residential areas shall not exceed 1500 feet in length and shall not serve more than twenty housing units. Cul-de-sac length shall be measured from the edge of traveled way of the intersecting street that provides two means of egress to the center of the cul-de-sac turnaround. Cul-de-sacs in commercial or industrial areas shall not exceed 500 feet, measured in the same manner as above.

2.13.2 Turnaround Requirements: Cul-de-sacs shall be provided with a turnaround at the closed end and intermediate turnarounds at intervals not exceeding 600 feet. Turnarounds shall meet the following minimum dimensions:

TABLE 2-4
MINIMUM TURNAROUND DIMENSIONS

AREA	ROW	PAVEMENT		REVERSE-RADIUS	
CLASSIFICATION	PRKNG	DIAMETER	DIAMETER	ROW	CURB
RESIDENTIAL under 500 ft	NO	104 FT	84 FT*	30 FT	40 FT
RESIDENTIAL over 500 ft	NO	118 FT	96 FT*	30 FT	40 FT
INDUSTRIAL/COMMERCIAL	NO	118 FT	96 FT*	30 FT	40 FT

*Includes 2 feet each side for gutter.

Circular turnarounds with center islands, and T-, and Y-shaped turnarounds may be permitted. See figures 2-7 and 2-8 for acceptable dimensions.

2.13.3 Moderate/High/Extreme Fire Hazard Areas: Cul-de-sacs in residential moderate/high/extreme fire hazard areas shall not exceed 1,500 feet in length. However, if the length exceeds 600 feet, project covenants shall be placed on any development requiring residential fire sprinkler systems be installed in all buildings accessing from the Cul de sac roadway.

2.13.4 Grades in turn arounds: Grades in cul de sac bulbs or turn arounds shall not exceed 6%.

2.13.5 Temporary Cul-de-sacs: Temporary cul-de-sacs, where specifically permitted by phased or separate construction, shall be provided at the ends of streets slated for future extension and connection to the street system. Temporary cul-de-sacs shall conform to all of the dimensional criteria of permanent cul-de-sacs. Curb and gutter, sidewalk and pavement are not required. However, gravel or other approved all weather surface must be placed on the cul-de-sac.

2.14 Pavement Design Criteria

Street pavement design shall be based on the volume and characteristics of the traffic expected to use the street over a minimum period of twenty years. Street pavement design shall also account for the sub grade soil's supporting strength characteristics, the type and strengths of the paving materials, and their combined behavior under load, in all probable climatic conditions.

2.14.1 Guidance Document: The design of street pavement shall be in compliance with AASHTO guidelines and any further requirements herein.

2.14.2 Geotechnical Investigation: A geotechnical investigation shall be conducted by a qualified individual prior to design of any City street, except for lane/place or local streets. The geotechnical investigation shall be used to obtain the soil characteristics and design data necessary to prepare an AASHTO pavement design. Soil investigation data shall be obtained to a minimum depth of ten feet below the proposed street grade at locations spaced no further than five hundred feet apart. Streets and cul-de-sacs shorter than 500 ft. shall have a minimum of one investigation location. The Design Engineer, in concert with the Geotechnical Engineer, shall be responsible for location of the tests to best represent the soil characteristics and shall be responsible for performing additional tests wherever soil types and conditions warrant.

2.14.3 Design Criteria: All pavement designs shall be conducted by a South Dakota licensed Professional Engineer and shall bear the Engineer's stamp and signature upon delivery to the City.

1) Pavement structures shall be designed for the predicted traffic loading over a minimum twenty-year performance period. Traffic can be represented by the number of 18-kip equivalent single axle loads (ESAL's). The ESAL's for the performance period represents the cumulative number of loadings from the time the roadway pavement is placed to the time when the serviceability is reduced to a terminal value.

2) The minimum design traffic levels for Lane/Place and Local Streets in residential areas, with fewer than 80 dwelling units, shall be 20,000 18-kip ESAL applications. Design traffic levels for all other residential Lane/Place and Local streets shall be 45,000 18-kip ESAL applications. The ESAL applications for all other street uses and classifications, including Local Streets in industrial and commercial areas, shall be determined by the City based on traffic counts of existing streets within the City that have a similar end use.

3) Other Minimum Street Pavement Design Criteria are:

	Local Street (Residental Areas Only)	**All Other Classifications**
Design Deviation	0.45	0.45
Soil Modulus	CBR times 1500	CBR times 1500
Initial Serviceability	4.2	4.2
Terminal Serviceability	2.0	2.5

The Drainage Coefficient for all street designs shall be 1.0 with edge drains and 0.75 without edge drains.

Soil Resilience Modulus must be expressed in terms of the results of a California Bearing Ratio (CBR).

The maximum AASHTO Design Reliability input shall be 75 for Local Streets in residential areas. The maximum AASHTO Design Reliability input shall be 80 for Local Streets in industrial or commercial areas. The AASHTO Design Reliability shall be 90 for all other streets.

Roadbed soils that are susceptible to swell, frost heave, or loss of structural support from variable or high moisture content shall be given special design consideration to insure that the long-term pavement performance is not compromised. This includes most clay/shale type soils in southeast and northeast Rapid City and some clay soils in west Rapid City.

2.14.4 Asphalt Cement Concrete (ACC) Pavement: The minimum ACC pavement section for local streets in residential areas shall be from five inches (5") of Class G asphalt concrete on six inches (6") of crushed gravel or ledge rock base course. Use of lesser pavement sections for local streets in residential areas shall require a complete geotechnical investigation and pavement design.

All other street classifications and uses shall require a geotechnical investigation and pavement design.

2.14.5 Portland Cement Concrete (PCC) Pavement: The minimum PCC pavement section for Local Streets in residential areas shall be six inches (6") of PCC pavement on four (4) inches of crushed gravel, or ledge rock base course. Use of lesser pavement sections for local streets in residential areas shall require a geotechnical investigation and pavement design.

All other street classifications and uses shall require a geotechnical investigation and pavement design.

2.14.6 Synthetics and Non-Standard Materials and Construction Practices: The use of synthetics for sub grade stabilization, or non-standard materials or practices such as cement or lime stabilization is beyond the scope of this manual and may be considered on an individual basis.

2.15 Parking, Curb and Gutter, and Sidewalks

2.15.1 Parking Requirements: Parking shall be provided in accordance with the parking requirements of the applicable City of Rapid City Ordinance.

Common use, visitor parking for Single-Family/Duplex/Townhouse and Residential use properties shall be provided at the rate of one paved parking stall per dwelling unit, located within three hundred feet of the residence. The distance shall be measured from the nearest point in the parking stall to the closest edge or corner of the dwelling unit. For street classifications below the Arterial designation, on-street parallel parking may be constructed to serve this visitor parking requirement. Where on street parallel parking is used to meet this requirement the public right of way and street width shall conform to the requirements identified in Figure 2-1 for on street parking. If on-street parking is not provided, approved no-parking signs shall be installed prohibiting on-street parking.

2.15.2 Curb and Gutter: Standard or roll curb and gutter shall be provided in accordance with the City's Standard Specifications. Roll curb and gutter will be allowed in residential lane/place streets and local streets, where proper drainage can be maintained using such a curb section.

2.15.3 Rural Road Section (no curb and gutter): A Lane/Place Street may be constructed as a rural road section, if an exception to the subdivision regulations is approved for the elimination of curb & gutter and sidewalk. Minimum Lane/Place right-of-way and pavement widths as contained in Figure 2-1 shall be maintained. Minimum two foot wide gravel or paved shoulders shall be provided. Ditches and driveways shall have a maximum side slope of 4:1 (H:V). Access approaches shall be constructed in accordance with the City's Standard Specifications. Roadway ditches and culverts shall be provided for drainage. The sizing of ditches and culverts shall be in accordance with the City's Stormwater Design Criteria.

2.15.4 Sidewalks: Sidewalks shall be provided at all locations along both sides of all roadways and streets. Sidewalks shall be provided in accordance with the City's Standard Specifications. Sidewalks along one side of lane/place or local streets may be allowed as an exception to these criteria. Such single sidewalk shall be a minimum of 6"-0" wide.

2.15.5 Sidewalk Location: All sidewalks, except for lane/place and local streets and cul-de-sacs, shall be property line sidewalks per Figure 2-1. Sidewalks in lane/ place and local streets and cul-de-sac may be either property line or curbside sidewalks.

2.15.6 Bike Paths and Special Sidewalks: Sidewalks designated as bike paths on designated bike routes shall be a minimum of ten feet wide.

2.15.7 Sidewalk Grades: Longitudinal sidewalk grades shall, where possible, match the profile grade of the adjacent street. Sidewalks for steep streets shall, where possible, be designed to comply with ADA requirements. If ADA requirements cannot be met, an exception to these criteria may be granted allowing the deletion of sidewalks. Steps in the sidewalk will not be permitted. Transverse grades shall slope toward the street and not exceed two percent (2%).

2.15.8 Handicapped Accessibility: Walkways (sidewalks, crosswalks, ramps, etc) shall be in compliance with the Americans with Disability Act (ADA) accessibility guidelines except when the unique characteristics of terrain prevent the full incorporation of accessibility features. Handicapped access ramps shall be constructed at all intersections where sidewalks are required and shall conform to the City's Standard Specifications.

2.16 Access Approaches

The design and location of access approaches onto streets is directly related to the specific use of the approach and the functional classification of the street the approach is fronting. Also, where work is being done in areas previously developed, exceptions to the access requirements may need to be considered in order to allow sensible re-development.

All access approaches shall be constructed in accordance with the City's Standard Specifications, unless exceptions are granted.

2.16.1 General Requirements: All access approaches constructed, relocated, widened, or altered in any way shall be in compliance with the following conditions:

1) No access approach shall be so located as to interfere with a utility facility.

2) Any necessary adjustments to a private or public utility facility or public structure mst be approved by the City of Rapid City. Approved adjustments shall be at no cost to the utility.

3) No access approach shall be located so as to create a hazard to pedestrians or motorists or so as to invite or compel illegal or unsafe vehicular movements.

4) City Street and highway right-of-ways shall not be used for private or commercial purposes. Parking shall not be allowed within the boulevard area. An approach access permit shall not be issued unless all vehicles to be serviced can maneuver and park entirely within the private property lines. However, backing from the property into the street may be allowed in residential areas.

5) If a property borders or fronts on more than one Lane/Place or Local Street, approach access may be granted on either street, at the request of the property owner.

6) Lots with street frontage of 200 feet or less shall be limited to one access approach.

7) The setback distance in Section 2.16 shall be measured from the property line, unless otherwise noted.

8) Access approach driveway aprons and/or curbs shall not encroach past the extended adjacent property line. The driveway opening shall be located a minimum of 5 feet from the extended adjacent property line.

9) Access Approach Spacing shall be in accordance with Section 2.16.7.

10) Where several adjacent properties exist along a collector or higher classification of street, each having limited frontage, or where there is a probability of such development, consideration shall be given to shared access points, and frontage or rearage roads so as to reduce the number of accesses to the street. Frontage or rearage road access to the street shall be at the extremities of the frontage or rearage road from street intersections or at well spaced intervals along it. Intervals shall be at least the distance of normal intersection spacing.

2.16.2 Residential Areas

In addition to the requirements of Section 2.16.1 the following items shall also apply to access approaches.

1) **Number of Openings:**

a) Not more than one access approach will be allowed to a single residence except as noted below.

b) Two access approaches are permitted if no traffic operation or safety problems result for:

i) Lots with 300 feet or more of combined frontage on two Local Streets in a residential area. Second access approaches will not be permitted on Collector or Arterial Streets.

ii) To accommodate circular driveways, mid-block lots with 200 feet or more of street frontage which meet the standards listed in Section 2.16.4, or mid block lots that have severe terrain prohibiting a standard 2 or 3 stall side-by-side garage.

2.16.3 Width of Access Approach and Driveway in Right of Way

1) A 20 ft. maximum access approach and driveway in the ROW plus 5 ft. tapers is allowed for the following situations:

a) One and two stall (side-by-side) garage at all setback distances;

b) Three stall (side-by-side) garage with a garage setback distance of 30 or more feet;

c) On the bulb of cul-de-sacs, for one and two stall (side-by-side) garages.

2) A 24 ft. maximum access approach and driveway in the ROW plus 5 feet tapers is allowed where two family units or larger are built or where a shared approach is used.

3) A 30 ft. maximum access approach and driveway in the ROW plus 5 feet tapers is allowed for the following situations:

a) Three stall (side-by-side) garage with a garage setback distance of less than 30 feet.

b) A shared driveway for townhouses and duplexes with adjoining two or three stall (side-by-side) garages with a setback distance of 30 or more feet.

c) On the bulb of cul-de-sacs for a three or more stall (side-by-side) garage.

4) A 40 ft maximum access approach and driveway in the ROW plus 5 ft tapers is allowed where a shared driveway for townhouses and duplexes with adjoining two or three stall (side-by-side) garages with a setback distance of less than 30 feet.

2.16.4 Circular Driveways

Circular driveways are permitted if all the following conditions are met:

1) The lot has 200 feet or more of street frontage,

2) The inside radius of the driveway is not less than 20 feet,

3) The radius point is located at or inside the property line,

4) The minimum acute angle, measured from the edge of pavement, is 80 degrees.

5) The maximum width of the access approach and driveway in the ROW is 16 feet plus 5 ft. tapers.

2.16.5 Commercial and Industrial Areas

In addition to the requirements of Section 2.16.1, the following items shall also apply to access approaches in commercial and industrial areas.

1) The number of access approaches allowed to a commercial or industrial establishment will be dependent on the size and design of the establishment or development. The developer or owner shall be responsible to show the need for the proposed number of access points.

2) In commercial and industrially zoned areas, the access approach openings shall be not less than sixteen feet in width for one way traffic, not less than twenty four feet in width for two way traffic, and no more than forty feet in width, exclusive of the curb tapers or radii.

3) Access approaches for commercial and industrial sites shall be designed as radius approaches, similar to an intersection. Radii shall be as specified elsewhere in these criteria.

2.16.6 Access Approach Spacing

The distance between adjacent access approaches must be sufficient to allow vehicles to safely queue, accelerate, decelerate, and cross-conflicting traffic streams without excessive interference with through traffic or traffic using adjacent access approaches.

Where access approaches are to be signalized, a minimum spacing of 1,200 feet to any other signalized intersection is required. Access approach signals shall be interconnected with any other signals within 2,500 feet of the signalized approach.

Access approach signalization shall be in accordance with City and/or State of South Dakota standards in effect at the time the permit is acquired. The access approach signalization shall be at no cost to the City or State. The City will assume maintenance and utility costs upon completion and acceptance of the installation.

2.16.7 Approach Corner Clearance

Minimum access approach clearances for street intersections shall be as indicated on Figure 2-9. All distances in Figure 2-9 shall be measured from the back of curb or, where there is no curb, from the edge of the pavement or gravel.

2.16.8 Location Coordination

Commercial and industrial access approaches on opposite sides of a street, where possible and reasonable, will be located so opposing lanes lineup to provide the best possible vision of drivers entering the street. Adequate sight distance shall be provided for vehicles exiting and entering an approach. Approach locations will be evaluated to determine whether sight obstructions such as buildings, signs, vegetation, parked vehicles, highway alignments, etc. exist.

2.16.9 Joint or Shared Access Easement

When one access approach is to be used or shared by adjacent properties under different ownership, each property owner must provide the necessary legal documents to establish an access easement agreement. Joint access is encouraged whenever practical.

2.16.10 Driveway Grades

Driveway grades shall be compatible with their intended use and in compliance with the City's Standard Specifications.

2.17 Traffic Studies

2.17.1 Responsibilities for Traffic Report

1) Traffic impact reports shall be required by the City, on projects as specified below, in order to adequately assess the impact of a proposal on the existing or planned street system. The primary responsibility for assessing the traffic impacts associated with a proposed development will rest with the developer with the City serving in a review capacity.

2) Unless waived by the Public Works Director and Growth Management Director, a written report meeting the City guidelines will be required for any nonresidential development proposal when trip generation during the peak hour is expected to exceed 100 vehicles as determined by section 2.17.2.2, or any multifamily residential development with150 or more dwelling units.

3) Preparation of the report shall be the responsibility of the developer and must be prepared by a South Dakota licensed Professional Engineer with experience in traffic engineering. Upon submission of a draft traffic report, the City will review the study data sources, methods, and findings. Comments will be provided in a written form. The developer and his engineer preparing the report will then have an opportunity to incorporate necessary revisions prior to submitting a final report. All reports shall be reviewed and accepted by the City.

4) When a new phase of a development is submitted for review, all previous traffic reports relating to the development that are more than two years old must be updated, unless it is determined by the Public Works Director, that conditions have not changed enough to warrant an update.

5) Traffic reports will be required if the trip generation or dwelling unit criteria as noted in Section 2.17.1.2 are exceeded for the following:

a) For a rezoning application or Conditional Use Permit.

b) For a final plan or final development plan if the property has already been rezoned for the proposed use and no traffic report was required for the rezoning.

c) Prior to issuance of a building permit, if the property has already been zoned/platted and no previous traffic report less than two years old exists.

d) Additional access off an arterial street to an existing use is being requested.

e) The developer shall be required to submit a new traffic report if, after submitting the original traffic report, the land use intensity and traffic generation area increase by more than 15 percent.

f) Where access points are not defined or a site plan is not available at the time the traffic report is prepared, additional traffic analysis may be required when a site plan becomes available or the access points are defined.

g) The developer will be notified at the planning stage if a traffic report will be required, provided sufficient information is available for the City to determine whether the trip generation/dwelling unit criteria have been met. If insufficient information is available but the property appears to involve a sufficiently intense land use, a traffic report may be required.

2.17.2 Traffic Report Format

Traffic consultants are encouraged to discuss projects with the applicable City Department prior to starting the study. Topics for possible discussion at such meetings may include directional distribution of traffic, definition of the study area, intersections requiring critical lane analysis, and methods for projecting build-out volume. A firm base of cooperation and communication between the City, the owner or developer, and the consultant in creating traffic characteristics that are in the best interest of the total community is desired. Specific requirements will vary depending on the site location, however, all traffic reports shall contain, as a minimum, the following information:

1) Introduction: A brief description of the size of the land parcel, general terrain features, the location within the jurisdiction and the region should be included in this section. In addition, the roadways that afford access to the site, and are included in the study area, must be identified. The exact limits of the study area are to be based on engineering judgment, and an understanding of existing traffic conditions at the site. In all instances, however, the study area limits shall be mutually agreed upon by the developer, his design professional, and the City. These limits will usually result from initial discussion with the City. A vicinity map that shows the site, in relation to the surrounding transportation system, must be included.

   a) Existing and Proposed Site Uses: The existing and proposed uses of the site must be identified in terms of the various zoning categories of the City. In addition, the specific use for which the request is made must be identified, if known, since a number of uses may be permitted under the

existing ordinances.

b) Existing and Proposed Uses in Vicinity of the Site: A complete description of the existing land uses in the vicinity of the site, as well as their current zoning and use, must be included.

c) The developer must also state the proposed uses for vacant adjacent land in order that any proposed transition in uses is identified. This latter item is especially important where large tracts of undeveloped and/or underdeveloped land are in the vicinity of the site, and within the prescribed study area. Generally much of this information can be obtained from the initial meetings with the City's Planning staff.

d) Existing and Proposed Roadways and Intersections: Within the study area, the developer must describe existing roadways and intersections (geometrics and traffic signal control) as well as improvements contemplated by government agencies. This would include the nature of the improvement project, its extent, implementation Schedule, and the agency or funding source responsible.

2) **Trip Generation and Design Hour Volumes**

a) A summary table listing each type of land use, the size involved, the average trip generation rates used (total daily traffic and a.m. and p.m. peaks), and the resultant total trips generated shall be provided.

b) Trip generation will be calculated from the latest data contained within the *Institute of Transportation Engineers' Trip Generation Guide* (latest edition) or NCHRP Report No. 187. In the event that data is not available for the proposed land use, the City must approve estimated rates prior to acceptance.

c) The peak hour volume used to determine public improvements will be estimated by one of the following methods which are listed in:

i) Traffic volume counts for existing uses.

ii) Peak hour trip generation rates as published in the *ITE Trip Generation Guide* latest edition.

iii) NCHRP Report No. 187, where justified.

3) **Trip Distribution**

The direction of approach for site-generated traffic will be presented in this section. The technical analysis steps, basic methods, and assumptions used in this work must be clearly stated.

4) **Trip Assignment**

This section will describe the utilization of study area roadways by site-generated traffic. The anticipated site traffic volumes must be combined with existing and projected area traffic volumes in Section 2.17.2.2 to describe mainline and turning movement volumes for future conditions with the site developed as proposed. Internal trips in excess of 10 percent will require analytical support to demonstrate how the higher figures were derived. Nongenerated passerby traffic reductions in generation volumes may be considered if

applicable. All estimates of trip distribution, assignment, and modal split are subject to review and approval by the City.

5) **Existing and Projected Traffic Volumes**

a) Graphics must show:

i) AM peak hour site traffic (in and out) including turning movements.

ii) PM peak hour site traffic (in and out) including turning movements.

iii) AM peak hour total including site (in and out) and through traffic including turning movements for current conditions and 20-year projections or build-out.

iv) PM peak hour total including site (in and out) and through traffic including turning movements for current conditions and 20-year projections or build-out.

b) All raw traffic count data (including hourly ADT and peak hour turning movements) and analysis worksheets shall be provided. Computer techniques and the associated printouts can be used as part of the report.

c) Build-out projections shall include major vacant properties around the proposed development as defined by the City. Volume projections for background traffic growth will be provided by the City, or a method for determining their volume will be recommended by the City.

d) All total daily traffic counts should be actual machine counts and not based on factored peak hour sampling. Latest available machine counts from the South Dakota Department of Transportation (SDDOT), the City, and other agencies may be acceptable if not more than two years old.

e) All traffic will be assigned to existing and planned facilities in a manner consistent with existing traffic patterns and approved by the City.

6) **Capacity Analysis**

A capacity analysis will be conducted for the street intersections at driveways for the proposed development. Within the limits of the previously defined study area, capacity analyses will also be conducted for street intersections. The a.m., p.m., and any other possible peak period will be tested to determine which will be analyzed. Pedestrian movements should also be considered in the evaluation. Capacity calculations should also include an analysis for 20-year projections or build-out conditions. Capacity analysis will be calculated in accordance with the procedures outlined in *The Highway Capacity Manual,* TRB Special Report No. 209.

7) **Traffic Signals**

a) The need for new traffic signals shall be checked using the warrants in the *Manual on Uniform Traffic Control Devices,* latest edition. Traffic progression is of paramount importance. Generally a spacing of one-half mile for all signal-controlled intersections should be maintained. This spacing is usually desirable to achieve good speed, capacity, and optimum signal progression.

b) To provide flexibility for existing conditions and ensure optimum two-way signal progression, an approved traffic engineering analysis will be made to properly locate all proposed connecting access approaches that may require signalization. An optimum two-way progression pattern will be established between two public intersections that bracket the proposed approach as chosen by the City. These bracketing intersections should be about one mile apart, and be existing, or possible future signal locations.

c) The progression pattern calculation must use a cycle length of between 50 and 120 seconds, and a travel speed of 40 mph, unless existing signal systems and speed limits govern usable cycle lengths and travel speeds. A desirable bandwidth of 50 percent must be used where existing conditions allow. Where intersections have no signals presently, but are expected to have signals, a 60 percent mainline, and 40 percent cross street cycle split should be assumed. The green time allowed to the cross street will be considered no less than the time which is required for a pedestrian to cross the mainline at 4 feet per second. Those intersections which would reduce the optimum bandwidth if a traffic signal were installed will remain un-signalized and have turning movements limited by driveway design or median islands.

8) **Level of Service**

Level of Service C during the peak hour will be the design objective. The design year will be approximately 20 years following construction or at build-out of the area. Levels of service are defined in *The Highway Capacity Manual.*

9) **Traffic Crashes**

Traffic crash data for affected street corridors shall be required for the study.

10) **Recommendations**

In the event that analysis indicates unsatisfactory levels of service on study area roadways, a description of proposed improvements to remedy deficiencies shall be included. These proposals would not include committed projects by the City or the SDDOT. In general, the recommendation section should include:

a) Proposed Recommended Improvements. This section shall describe the location, nature, and extent of proposed improvements to assure sufficient roadway capacity.

b) Volume/Capacity Analysis at Critical Points. Another iteration of the volume/capacity analysis will be described, which demonstrates the anticipated results of making these improvements.

c) Levels of Service at Critical Points. As a result of the revised volume/capacity analysis presented in the previous section, levels of service for the highway system with improvements will be presented.

11) **Conclusion**

The last chapter of the report must be a clear, concise description of the study findings. It is anticipated that this concluding chapter will serve as an executive summary.

12) **Revisions to Traffic Report**

Revisions to the traffic report must be provided as required by the City. The need to require revisions will be based on the completeness of the traffic report, the thoroughness of the impact evaluation, and the compatibility of the study with the proposed access and development plan.

2.18 Traffic Control

Traffic Control Plans, Traffic Control Devices, Traffic Signals, and Pavement Marking and Signage shall be designed in accordance with the Manual on Uniform Traffic Control Devices (MUTCD), the City's Standard Specifications, and ADA requirements.

2.19 Roadway Lighting

Roadway lighting is intended to provide minimum lighting levels in the roadway for vehicular and pedestrian safety. All electrical work shall comply with the National Electrical Code and the Requirements and Standards of the SDDOT for Roadway Lighting.

2.19.1 Conduit and Wiring

All wiring under roadways and driveways shall be in PVC conduit. Conduit shall have a minimum of 24" bury and shall be 11/2' minimum size. Other wiring may be direct buried cable. Wiring shall be run, by the local power company, from the nearest transformer to the light location and proper metering shall be provided at the transformer location. The installation shall be coordinated with and done by local power company.

2.19.2 Street Light Locations and Spacing

1) Street lights shall, whenever possible, be installed on a property line, which runs perpendicular to the street. Generally, fixtures shall be placed in the ROW and shall be 2 feet behind the back of curb, unless curb side sidewalks are provided. If no curb is installed, special locations proposed must be submitted for approval. If roadway light cannot be installed within the ROW, a utility easement will be required.

2) On residential streets including Lane/Place, Local, and Collector Streets, lights shall be placed at all intersections and shall be located between intersections, essentially at curves, with a nonstaggered pattern and not more than 400 feet apart.

3) On Commercial, Industrial, Expressway, and Arterial Streets, spacing shall be not more than 250 feet apart and the lights shall be staggered, where possible.

4) Where special fixtures are proposed, light fixture locations shall be as stated in paragraph 2 above or as determined by the specific fixture and lighting design. Optimetrics and lighting level result shall be submitted as part of the design submittal.

2.19.3 Light fixtures and Poles

1) Generally within Rapid City, light fixtures and poles are furnished and installed by Black Hills Power Company as part of a Street Lighting agreement with the City of Rapid City.

2) If a Developer desires special Roadway Lighting for a project the City will consider such a request when the following data are submitted:

   a) Catalog cuts and optimetrics of the proposed fixtures. Care shall be used when selecting proposed fixtures to minimize light pollution, spill light and the creation of bright spots in the roadway.

   b) A proposed fixture layout with lighting intensity calculations for the area proposed. In residential areas, lighting calculations are intended to show only luminance and luminance ratio in the immediate vicinity of the fixture.

   c) An approved fused disconnecting means shall be provided near the transformer which furnishes power to the light fixture.

   d) A properly executed power use and maintenance agreement with the City. A copy of such an agreement can be obtained from the GrowthManagement Department.

2.20 Traffic Calming

Traffic calming is the process by which vehicular speeds are reduced to acceptable levels on local streets, providing a safer environment for both motorists and pedestrians. The calming may be accomplished through the installation of approved devices such as "round abouts:", flares, and center islands. Traffic calming is limited to residential, lane/place, local, and collector streets. Traffic calming devices must be designed to accommodate emergency and maintenance vehicles.

2.20.1 Calming Devices

1) **Roundabouts:** Roundabouts may be accepted, when planned on Lane/Place, Local, or Collector streets as a traffic stilling device. Their use should be in keeping with the character of the development and the location in the street system. If a center landscaped island is proposed within the round about, the minimum radius of the island shall be 33 feet.

2) **Street Islands and Boulevards:** Center street Islands and boulevards may be acceptable, when planned on Lane/Place, Local or Collector streets for speed control, when they encourage pedestrian safety, and when they are designed to enhance the character and beauty of a development. Center islands may be located at intersections, or mid-block, but shall not be longer than 200 feet. Street pavement width on each side of the island shall be 20 feet minimum

3) **Curb Line Flares:** On collector streets, where on street parallel parking is planned, the designer is encouraged to consider the use of curb line flares. Flares may also be used to increase pedestrian safety when used in conjunction with pedestrian generators such as schools, parks, etc.

2.20.2 Landscaping

All planting areas within traffic calming devices must have planting designed such that Site triangles re not compromised. Agreements with adjacent property owners must Be in place for the continued are of vegetation within the devices.

END OF SECTION

FIGURE 2–1

STREET AND RIGHT–OF–WAY CRITERIA

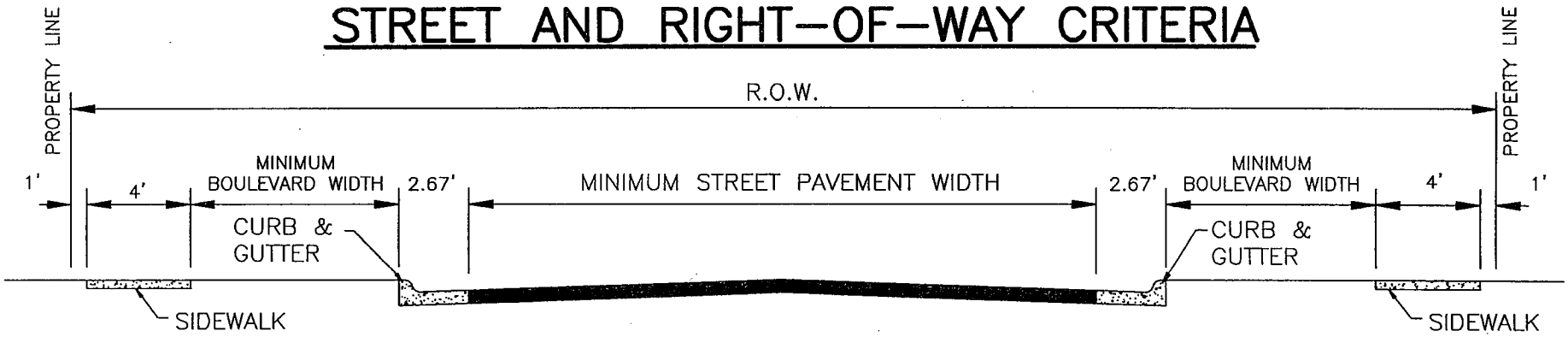

STREET CLASSIFICATION	MINIMUM STREET PAVEMENT WIDTH WITH NO PARKING (FEET)	MINIMUM STREET PAVEMENT WIDTH WITH ONE SIDE PARKING (FEET)	MINIMUM STREET PAVEMENT WIDTH WITH TWO SIDES PARKING (FEET)	MINIMUM BOULEVARD WIDTH (FEET)	MINIMUM RIGHT OF WAY WIDTH (FEET) (3)
ALLEY	16	NA	NA	NA	20
LANE/PLACE	20 (1)	NA	28	5	49 (2)
LOCAL	20 (1)	NA	28	5	52 (2)
COLLECTOR	24	30	34	8	68
WITH TURN LANE	32	NA	NA	NA	68 (2)
ARTERIAL	36 (1)	NA	NA	8	100
INDUSTRIAL	26 (1)	NA	NA	8	59 (2)
COMMERCIAL	26 (1)	NA	NA	8	70 (2)
EXPRESSWAY	AS REQUIRED BY SDDOT CRITERIA				70
EACH ADDITIONAL LANE	ADD 11	NA	NA	NA	ADD 11

(1) WHERE A TURN LANE IS REQUIRED, PAVEMENT WIDTH INCREASES BY 10 FEET

(2) RIGHT OF WAY WIDTH INCREASES BY 10 FEET AT A POINT THAT IS 200 LINEAR FEET FROM AN INTERSECTION WITH AN ARTERIAL STREET

(3) INCREASES IN RIGHT OF WAY MAY BE REQUIRED TO ACCOMMODATE SPECIAL PAVEMENT WIDTHS SUCH AS ADDITIONAL TRAVEL LANES, TURN LANES, PARKING OR OTHER ITEMS AS REQUIRED

THE MINIMUM STREET PAVEMENT WIDTHS SHOWN ARE THE RESPONSIBILITY OF THE DEVELOPER. IF ADDED WIDTH IS REQUIRED BY THE CITY BEYOND THAT REQUIRED BY THE CITY MUNICIPAL CODE THE COSTS SHALL BE PAID AS "OVERSIZE COSTS" BY THE CITY

NA – NOT ALLOWED
APRIL 2008

CITY of RAPID CITY
DESIGN CRITERIA MANUAL

NOT TO SCALE

FIGURE 2–2

INTERSECTION SIGHT DISTANCE STOP–CONTROLLED INTERSECTION

POSTED SPEED LIMIT OF MAJOR STREET		25	30	35	40	45	50
DISTANCE A (FEET)	PASSENGER CAR	280	335	390	445	500	555
	TRUCK	425	510	600	680	765	850
DISTANCE B (FEET)	PASSENGER CAR	240	290	335	385	430	480
	TRUCK	390	465	540	620	700	775

NOTES:
THE VALUES CITED ASSUME TRUNS ONTO A TWO–LANE STREET WITH NO MEDIAN AND GRADES OF 3% OF LESS.
FOR OTHER CONDITIONS, THE SIGHT DISTANCE MUST BE ADJUSTED AS PER AASHTO GUIDELINES.

THE VALUE FOR TRUCKS SHALL BE APPLIED IN COMMERCIAL AND INDUSTRIAL ZONED AREAS.

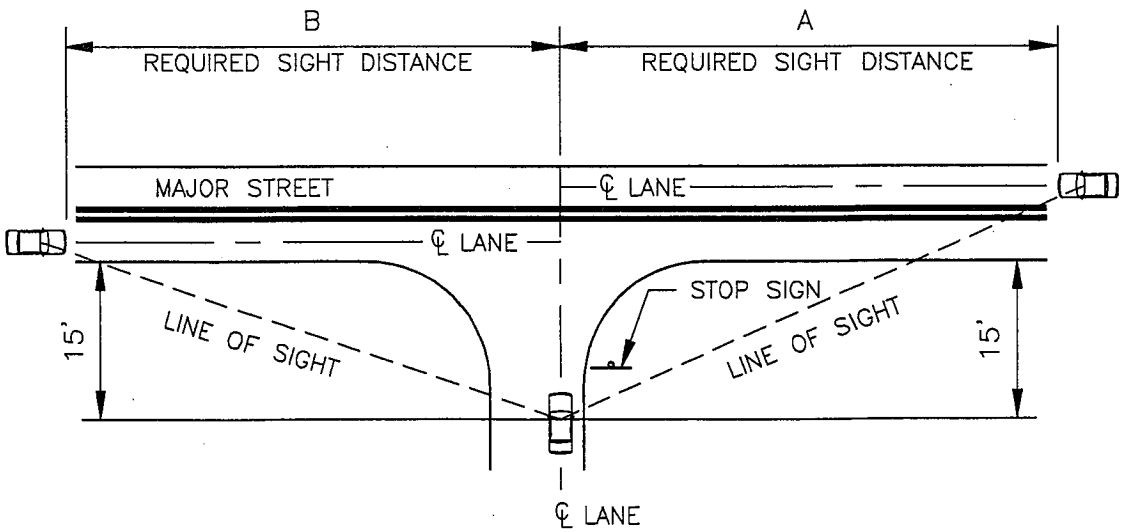

NOT TO SCALE

FIGURE 2–3

INTERSECTION SIGHT DISTANCE YIELD–CONTROLLED INTERSECTION WITH 4 LEGS

POSTED SPEED LIMIT OF MAJOR STREET		25	30	35	40	45	50
DISTANCE A (FEET)	PASSENGER CAR	240	290	335	385	430	480
POSTED SPEED LIMIT OF MINOR STREET		25	30	35	40	45	50
DISTANCE B (FEET)	PASSENGER CAR	130	160	195	235	275	320

NOTES
THE VALUES CITED ASSUME A TWO–LANE MAJOR STREET WITH NO MEDIAN AND GRADES OF 3% OR LESS. FOR OTHER CONDITIONS, THE SIGHT DISTANCE MUST BE ADJUSTED AS PER AASHTO GUIDELINES.

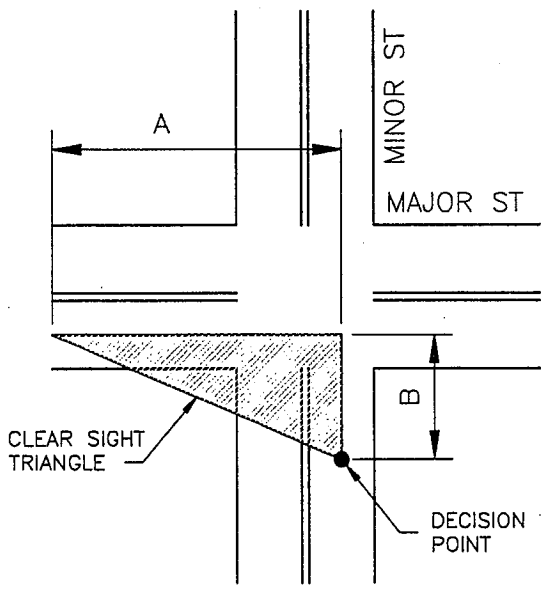

CLEAR SIGHT TRIANGLE FOR VIEWING TRAFFIC APPROACHING FROM THE LEFT

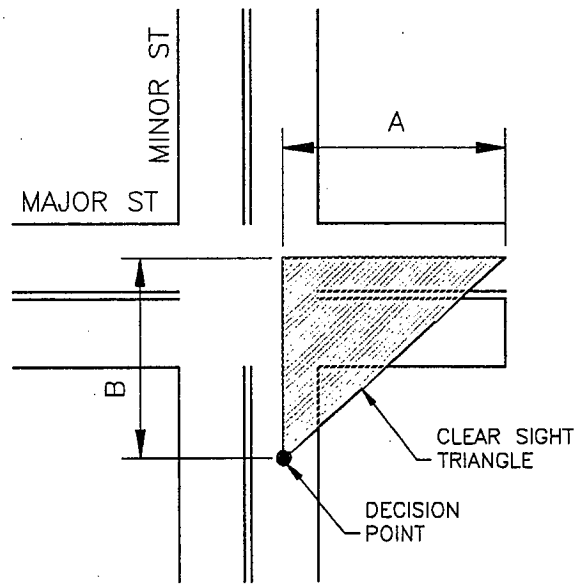

CLEAR SIGHT TRIANGLE FOR VIEWING TRAFFIC APPROACHING FROM THE RIGHT

NOT TO SCALE

FIGURE 2–4

INTERSECTION SIGHT DISTANCE YIELD–CONTROLLED INTERSECTION WITH 3 LEGS & UNCONTROLLED INTERSECTION WITH 3 LEGS

POSTED SPEED LIMIT OF MAJOR STREET		25	30	35	40	45	50
DISTANCE A (FEET)	PASSENGER CAR	295	355	415	475	530	590
POSTED SPEED LIMIT OF MINOR STREET		25	30	35	40	45	50
DISTANCE B (FEET)	PASSENGER CAR	85	85	85	85	85	85

NOTES
THE VALUES CITED ASSUME A TWO–LANE MAJOR STREET WITH NO MEDIAN AND GRADES OF 3% OR LESS. FOR OTHER CONDITIONS, THE SIGHT DISTANCE MUST BE ADJUSTED AS PER AASHTO GUIDELINES.

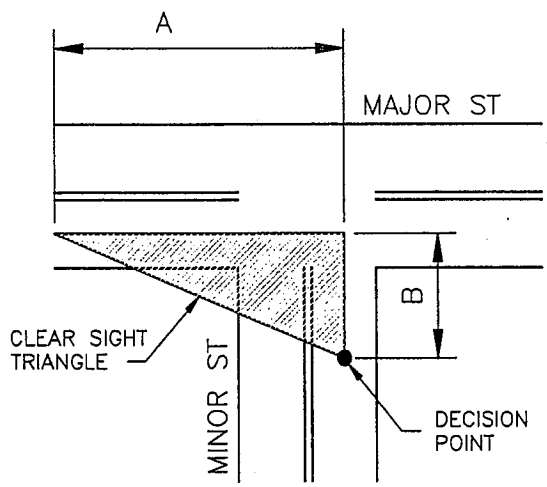

CLEAR SIGHT TRIANGLE FOR VIEWING TRAFFIC APPROACHING FROM THE LEFT

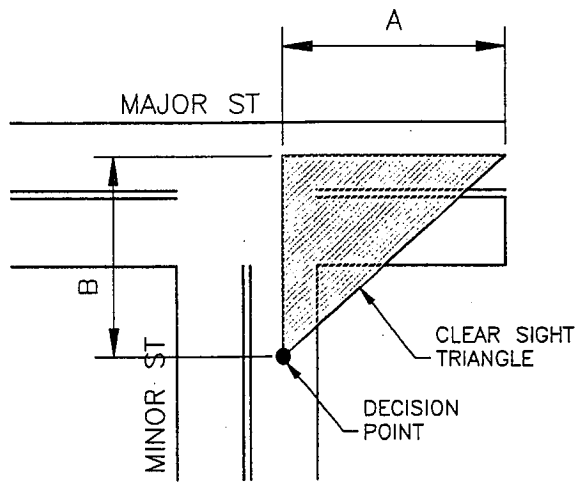

CLEAR SIGHT TRIANGLE FOR VIEWING TRAFFIC APPROACHING FROM THE RIGHT

NOT TO SCALE

FIGURE 2–5

INTERSECTION SIGHT DISTANCE UNCONTROLLED INTERSECTION WITH 4 LEGS

POSTED SPEED LIMIT OF MAJOR STREET (MPH)	25	30	35	40	45	50
DISTANCE A (FEET)	115	140	165	195	220	245
POSTED SPEED LIMIT OF MINOR STREET (MPH)	25	30	35	40	45	50
DISTANCE B (FEET)	115	140	165	195	220	245

NOTES
THE VALUES CITED ASSUME GRADES OF 3% OR LESS. FOR OTHER CONDITIONS, THE SIGHT DISTANCE MUST BE ADJUSTED AS PER AASHTO GUIDELINES.

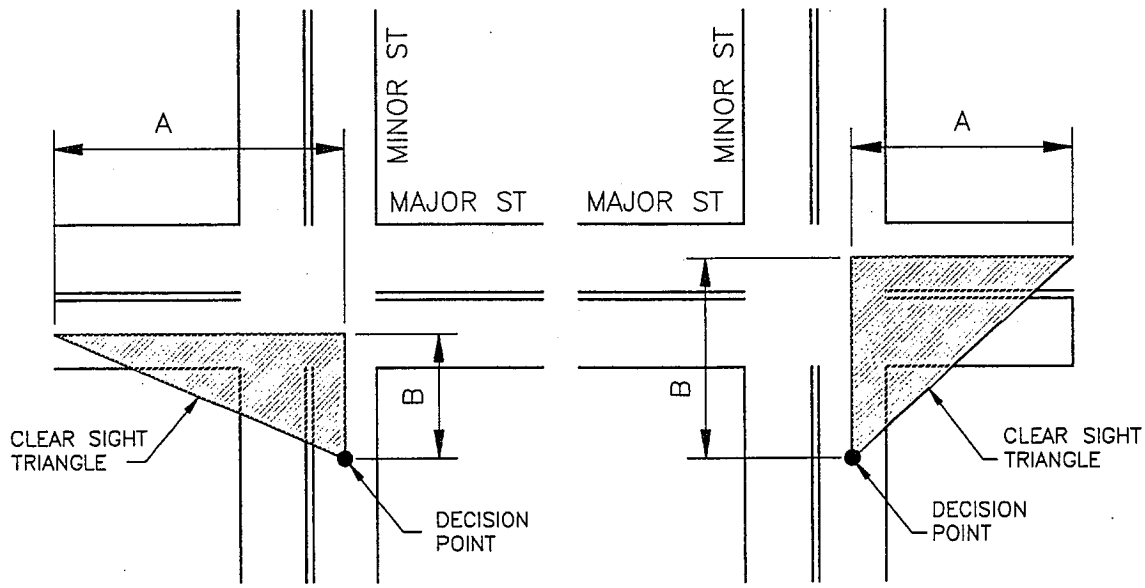

CLEAR SIGHT TRIANGLE FOR VIEWING TRAFFIC APPROACHING FROM THE LEFT

CLEAR SIGHT TRIANGLE FOR VIEWING TRAFFIC APPROACHING FROM THE RIGHT

NOT TO SCALE

FIGURE 2–6

SIGHT TRIANGLE REQUIREMENT PEDESTRIAN INTERSECTION

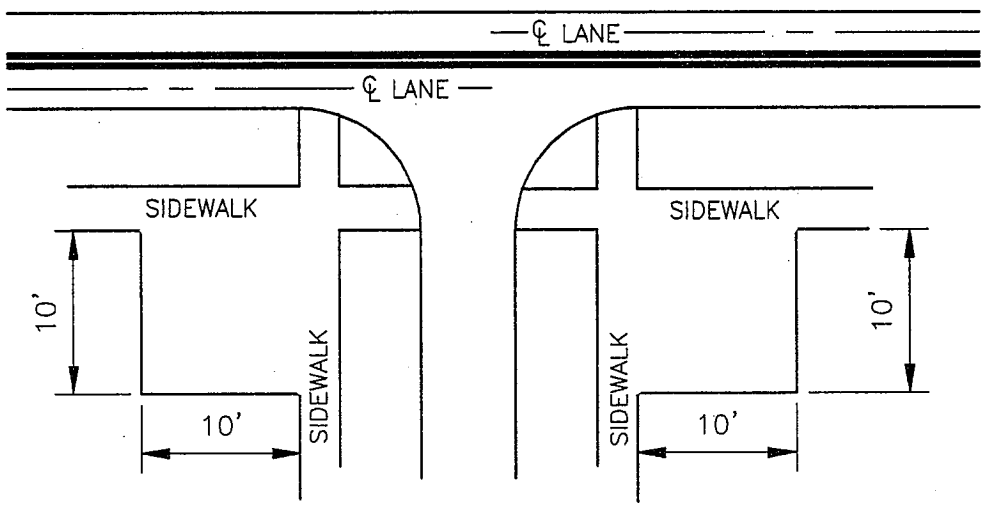

FIGURE 2–7

CUL–DE–SAC TURNAROUND DIMENSIONS

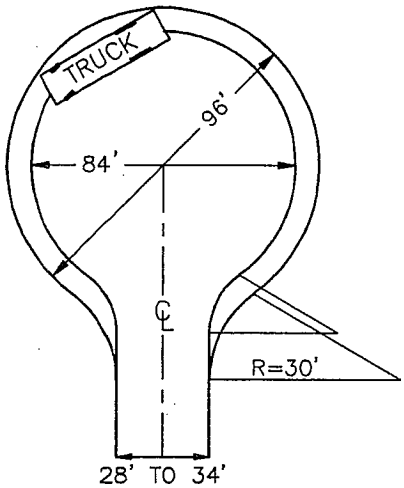

FOR CUL–DE–SACS UNDER 500' IN LENGTH AS MEASURED FROM THE BEGINNING CURB OF THE DEAD END ROADWAY TO THE CENTER OF THE CUL–DE–SAC, AN 84' DIAMETER BULB MAY BE USED. FOR ANY DEAD–END EXCEEDING 500 FT, A 96' DIAMETER BULB SHALL BE USED.

AS AN ALTERNATIVE TO THIS REQUIREMENT, THE CUL–DE–SAC BELOW MAY BE USED REGARDLESS OF THE DEAD END LENGTH FORM THE CURB.

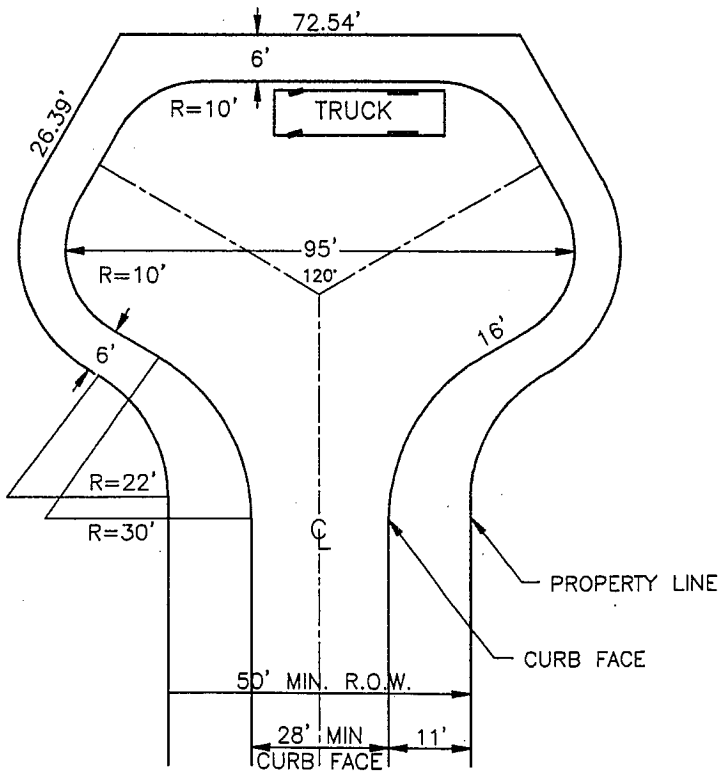

NOT TO SCALE

FIGURE 2–8

T AND Y SHAPED TURNAROUND DEMENSIONS

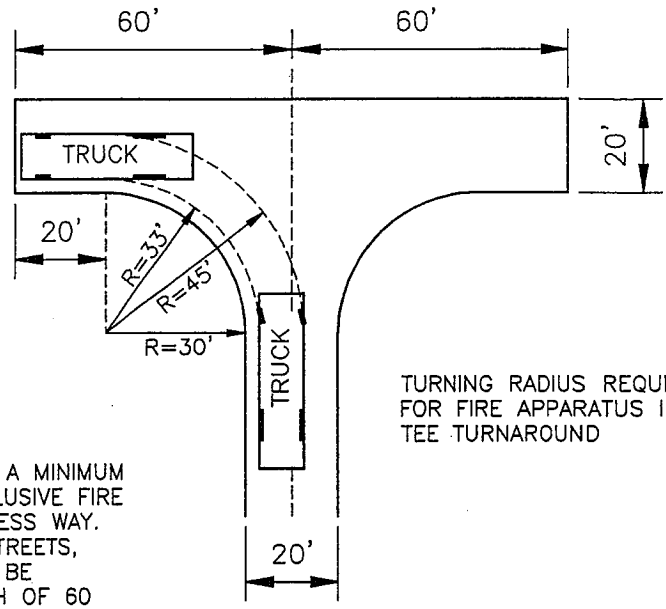

TURNING RADIUS REQUIRED FOR FIRE APPARATUS IN A TEE TURNAROUND

THE 20 FT ACCESS WIDTH IS A MINIMUM FOR USE ONLY WITH AN EXCLUSIVE FIRE DEPARTMENT EMERGENCY ACCESS WAY. FOR ROADWAYS OR PUBLIC STREETS, THESE ACCESS WIDTHS MUST BE INCREASED. THE END LENGTH OF 60 FT MAY REMAIN THE SAME, HOWEVER. VARIATIONS OF THIS HAMMERHEAD ARE SHOWN.

THESE ARE APPROVED ALTERNATIVES TO AND VARIATIONS FROM A STANDARD HAMMERHEAD TEE. ANY ANGLE FROM 90° TO 180° IS ACCEPTABLE PROVIDED THE SPECIFIED LENGTHS AND RADII ARE MAINTAINED.

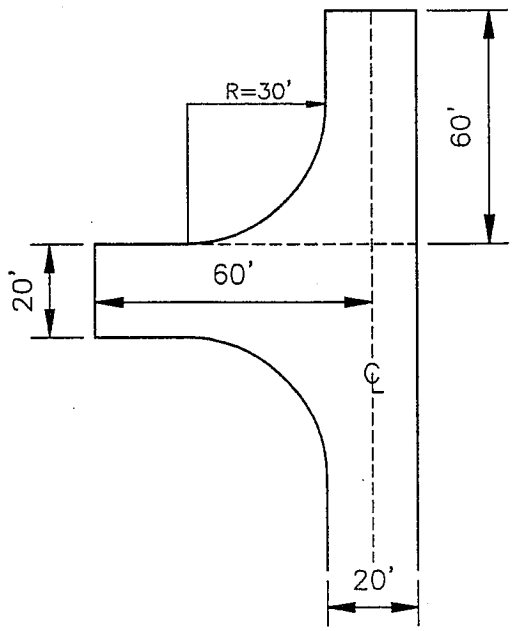

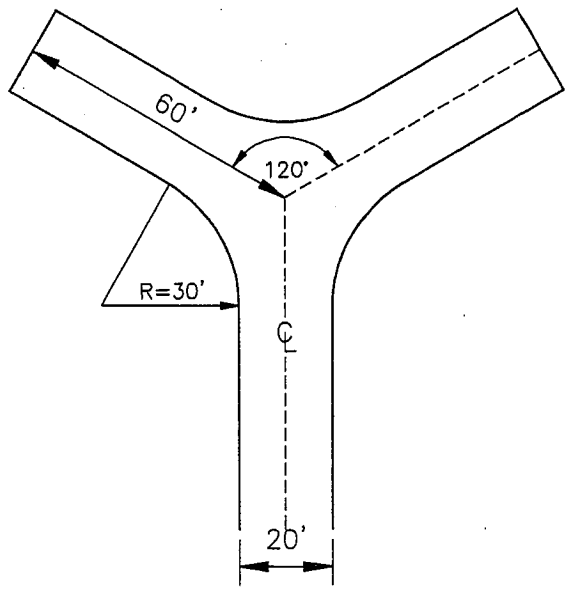

NOT TO SCALE

FIGURE 2–9

MINIMUM ACCESS APPROACH CLEARANCES

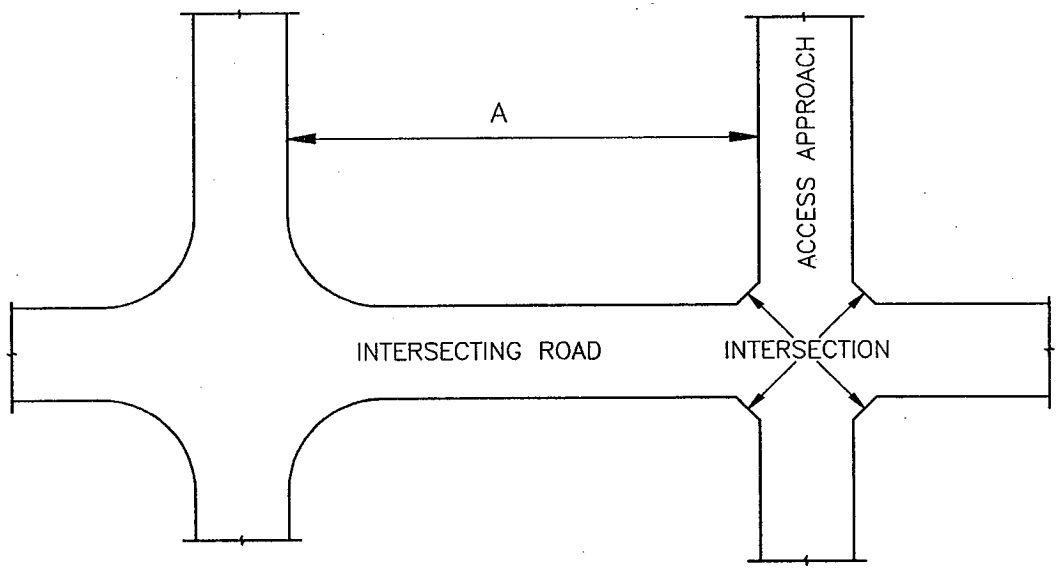

	CLASSIFICATION OF INTERSECTING ROAD							
	ARTERIAL		MINOR ARTERIAL		COLLECTOR		LOCAL & LANE/PLACE	
INTERSECTION CONTROL	SIGNALIZED	UNSIGNALIZED	SIGNALIZED	UNSIGNALIZED	SIGNALIZED	UNSIGNALIZED	SIGNALIZED	UNSIGNALIZED
MINIMUM CORNER CLEARANCE A (FEET)	250	150	200	125	175	90	100	50

NOT TO SCALE

CITY OF RAPID CITY

INFRASTRUCTURE DESIGN CRITERIA

SECTION THREE

WATER AND WASTEWATER UTILITIES

Section Three - Water and Wastewater Utilities

3.1 Applicability

This section applies to water and sewer utilities, including mains, pumping systems, pressure reducing stations, meter pits, domestic and fire service lines, and on-site systems; it does not cover irrigation systems. Construction and material requirements for infrastructure are specified in the City of Rapid City Standard Specifications.

3.2 Authority

This section is intended to comply with the Administrative Rules of South Dakota, which establishes standards for public water and sanitary sewer systems.

3.3 Related Documents

3.3.1 State of South Dakota Standards

3.3.2 Ten States Standards as adopted and supplemented by SDDENR are incorporated into this Manual by reference.

3.3.3 Administrative Rules of South Dakota, for individual and small on-site wastewater systems and as supplemented by city ordinances governs the design and construction of on-site wastewater systems.

3.3.4 The following documents or references may be utilized as additional or supplemental additional or supplemental sources of design criteria or standards:

Alternative Wastewater Systems, MOP FD-12, WEF, latest ed.;
AWWA Standards, various;
Design of Gravity Sewers, MOP FD-5, ASCE/WEF, latest ed.;
Design of Wastewater and Storm Water Pumping Systems, MOP FD-4, WEF, latest edition;
Gravity Sanitary Sewer Design and Construction, ASCE Manual and Report on Engineering Practices, No. 60;
Design Manual, On-Site Wastewater Treatment and Disposal Systems, USEPA, latest ed.;
Handbook of PVC Pipe Design, UniBell, latest ed.;
Pumping Station Design; Third Edition; Published by Elsevier Butterworth-Heinemann and distributed by AWWA;

3.4 General Requirements

The design of private fire protection systems, water distribution systems, and on-site waste water systems shall be accomplished by or under the direct supervision of a professional engineer registered by the State of South Dakota.

3.5 Required Locations of Utility Systems

3.5.1 Location of Utilities within public right of way shall conform to the requirements of Figure 3-1.

3.5.2 Mains shall be constructed only in ROW, except as approved by the Public Works director or his designee. Consideration for construction of mains within easements may be considered under the following conditions:

1) Topography is such that no street alignment, which allows mains to serve adjacent properties from a location in the ROW can be provided;

2) Water mains need to complete a looped system;

3) For sewer mains, no more than one manhole is located in the easement and that manhole is a standard manhole, not a drop manhole;

4) Special Circumstances; such as, offsite utilities must pass through un-platted property to provide service for a proposed development;

5) An easement is granted to the City and recorded with Registrar of Deeds, which easement shall include the following:

   a) minimum easement width of 20 feet centered on the main,

   b) For utilities buried deeper than 10 feet, the easement width shall be two times the depth, centered on the utility.

   c) If utilities must pass between adjacent properties, the easement shall be located on one property.

   d) Combined water and sewer easements shall be a minimum of 30 feet wide with 10 feet separation between utilities and 10 feet between the utility and the edge of the easement.

   e) Easement documents shall indicate that the property owner shall maintain easement free of all obstructions including but not limited to buildings, walls, fences, hedges, trees and shrubs. These easements grant, to all public authorities, the right to construct, operate, maintain, inspect, and repair such improvements and structures as the authority deems necessary to facilitate operation and maintenance of the public infrastructure.

   f) Easement documents shall identify entities responsible for repair or maintenance of any surfacing.

6) The finished surface profile of utility easements, parallel to the utility, shall not exceed 20%.

7) The finished cross slope or transverse slope of the utility easements, transverse to the utility shall not exceed 5%.

8) For public water mains, all high points in the profile shall be located within public right of way, or if located in an easement, all weather surfacing shall be provided to the high point for maintenance access.

9) For public sewer mains, all weather surfacing shall be installed to provide access to all manholes, except under condition 3.5.2.3 a single manhole may be located in a

location without all weather surfacing provided that the manhole is not a terminus manhole and all other provisions for installation in an easement are met. Refer to figure 3.2.

10) Easements longer than 1000 feet shall provide turn-arounds for maintenance vehicles at 600 feet on center. Refer to Figure 3-3 for turn-around dimensions.

11) Minimum vertical clearance over easements shall be 13'-6".

12) Minimum surfacing width must be 12 feet. Surfacing shall be an "all weather" material, such as gravel or crushed rock.

3.5.3 Supplemental requirements for fire hydrants that cannot be located within the ROW.

1) A separate easement specifically for the City of Rapid City shall be provided for the fire hydrant.

2) The easement shall provide an area from the ROW defined as 8 feet each side of the fire hydrant lead and extending 6 feet (minimum) past the fire hydrant (to the rear of the fire hydrant).

3) The fire hydrant shall be located so that there are no obstacles, barriers, or topographical constraints, which limit the Fire Department's ability to use the hydrant.

4) A note shall be placed on the easement document stating that the property owner cannot cover, block, or otherwise inhibit the use of the fire hydrant by installing any landscaping structural features, bushes, fences, retaining walls, etc. and the fire hydrant shall, at all times, remain visible from the street ROW.

5) Fire hydrant placement outside of the ROW requires authorization of the Public Works Director, except for private fire protection systems, as defined in Section 3.15.11 Private Fire Protection Systems & Fire Services.

3.5.4 Water mains shall be extended across the full frontage of each parcel to be served, except as modified for cul-de-sacs.

3.5.5 Sewer mains shall be extended across the full frontage of each parcel to be served, except may be terminated at a point just upstream of where service lines enter the ROW and when the City determines that no possibility exists that the main will need to be extended to serve adjacent property. Refer to Figure 3-4.

3.5.6 Service lines shall be laid approximately perpendicular to the mains and shall connect directly into mains without crossing side or rear lot lines of adjacent parcels, and without running parallel to ROW centerline. Refer to Figure 3-5.

3.5.7 Special circumstances, cul-de-sacs. Refer to Figure 3-6.

3.5.8 Special circumstances, West Boulevard Historical District; contact City Engineering (Utilities).

3.5.9 Separate and individual service lines shall be provided for each building or in the case of townhouses or condominiums, for each unit. Refer to Figures 3-7A, 3-7B and 3-8.

3.6 Construction Phasing

3.6.1 Sewer systems shall terminate at the nearest upstream manhole located in adjacent and subsequent phases; if the sewer has the potential to be extended, a 2' stub shall be provided on the upstream side of the last manhole.

3.6.2 Water distribution systems shall extend across all proposed street intersections located in adjacent and subsequent phases.

3.6.3 Construction phasing which terminates mains in mid-block will be required to meet Section 3.7, Provisions for Future Extension.

3.7 Provisions for Future Extension

3.7.1 Water Distribution Systems: Mains shall be terminated with a valve and plug immediately beyond a hydrant set on a tee and not at the end of the pipe in order to permit future extension of the main without opening or shutting off the main. Fire hydrants located at the terminus of a cul-de-sac may be terminated in accordance with Figure 3-6.

3.7.2 Sewage Collection Systems:

1) Manholes shall be fitted with inlet hole, boot, and 2 foot sewer pipe extension with cap to permit future extension without additional modification to the manhole. Termination manholes will be permitted where the City determines that no future extension of sewer main is possible. Refer to standard detail for "Termination Manhole" in the City of Rapid City, Standard Specifications.

2) Sewer main clean outs will not be permitted.

3.8 Requirements for Mobile Home Parks and One Owner, Multi-Residential Complexes, excluding Apartment Houses

3.8.1 Mobile home parks and one-owner multi-residential complexes shall have mains located within the internal street system of the park or complex. If the mobile home park or multi-residential complex requires more than one connection to the city system, the connections must have back flow prevention devices installed to prevent looping through the private main.

3.8.2 Service lines in mobile home parks and one owner multi-residential complexes shall meet the requirements of Section 3.15 of this Manual and the City of Rapid City Standard Specifications.

3.8.3 Mobile home parks and one-owner multi-residential complexes shall have individually metered water service and curb stop to each lot and or mobile home; a single meter for the entire mobile home park or multi-residential complex will not be permitted.

3.8.4 The requirements of this Section shall apply to proposed mobile home parks and to existing mobile home parks when replacement or major improvements are made to existing utility systems.

3.8.5 Nothing in this section shall prohibit the water or sewer mains within the park from being public infrastructure, provided the utilities meet all applicable standards and criteria and are placed within the public right of way or applicable utility easement.

3.8.6 If the mobile home park consists of a private distribution system, an access easement shall be granted to the City for the purpose of operating and shutting off individual services.

3.9 Water Systems

3.9.1 Design Life

All proposed water distribution systems shall be designed to achieve a minimum hardware design life goal of seventy five (75) years.

3.9.2 Design Criteria

Water use criteria for various areas of the City shall be as stated in the current utility system master plan document. If values are not available in the master plan document, the following values shall be used:

1) Domestic water use criteria:

WATER USE CRITERIA			
Land Use	**Average Day**	**Peak Day**	**Peak Hour**
Residential Single Family*	0.4 gpm/du	1.8 gpm/du	4.0 gpm/du
Residential multi family	0.3 gpm/du	1.3 gpm/du	3.0 gpm/du
Commercial office/retail	0.8 gpm/ac	3.2 gpm/ac	6.4 gpm/ac
Industrial	0.8 gpm/ac	3.2 gpm/ac	25.6 gpm/ac**

gpm = gallons per minute

du = dwelling unit (house, apartment, hotel/motel room, camp site, etc.)

ac = acre

* Duplexes for the purpose of determining water use shall be considered as two residential single-family units.

** Recommended value to be utilized in the absence of site-specific engineering criteria/analysis.

2) Fire water flow requirements:

a) Residential: Fire flow shall be as detailed in the currently adopted version of the IFC. Residences under 3,600 SF in gross area shall have a 1,000 gpm fire flow requirement and residences over 3,600 SF shall have a flow requirement of 1,500 gpm or greater as detailed in the IFC.

b) Fire flows are based on a single fire event within an individual service zone. In case of discrepancy between the Fire Code and these criteria then the larger value requirements shall govern.

3) Allowable pipe velocities: The following table shows the maximum allowable pipe design velocities.

MAXIMUM WATER PIPE VELOCITY	
Conditions	**Maximum Allowable Pipe Velocity**
Average Day Demand	Six (6) feet per second (fps)
Peak Day Demand with Fire Flow	Twelve (12) feet per second (fps)
Peak Hour Demand	Ten (10) feet per second (fps)

Water Pipe Friction Factor Criteria:

The designer shall evaluate the distribution system they are analyzing for friction factors and minor losses. The designer shall summarize the assumptions made and supporting rational. In the absence of a more refined evaluation for small distribution systems a Hazen-Williams "C" factor of 120 shall be used for the piping material.

Water Storage Criteria:

The following methodology shall be used for sizing water storage facilities:

SSR = OS + (the larger of FR or ER)

Where: SSR = Supply Storage Required

FR = Fire Reserve (Fire Flow x Duration)

OS = Operating Storage (Water demand in excess of inflow capabilities from water supply sources, which demand has to be provided by outflow from the reservoir)

ER = Emergency Reserve (Stored water needed to meet demand during a period when some or all supply sources are out of service).

Notes: The design engineer shall determine an OS value based on the design conditions but shall not use an OS value less than 25% of the Total Peak Day Demand.

The design engineer shall determine an ER value based on the design conditions but shall not use an ER value less than one (1) day of the Average Day Demand.

The above formula assumes that a supply emergency (ER) and major fire event are not likely to occur simultaneously and therefore FR and ER are not additive but rather the larger of the two values shall be used in the equation for determining Supply Storage Required (SSR).

3.9.3 Water Main Materials

1) Water main materials: shall conform to the requirements of the Standard Specifications, Section 8.

2) Standard main sizes for the City of Rapid City will be 6"*, 8", 10", 12", 16", 20", 24", 30", 36", and 42". *Refer to criteria for applicable uses of 6" main.

3.9.4 Pressure

1) Static Pressure Requirements for systems are forty (40) psi minimum, and one hundred thirty-five (135) psi maximum. Pressures are to be designed and measured at the highest surface elevation of the main for minimum pressure and lowest surface elevation of the main for maximum pressure.

2) Peak 1-hr Flow Residual Pressure shall be thirty-five (35) psi minimum. Pressures are to be designed and measured at the highest surface elevation of the Main.

3) Minimum Static and Residual Pressures delivered to the finished ground floor elevation of any building site after the backflow preventer, shall be thirty (30) psi static and twenty-five (25) psi residual.

4) Individual booster pumps shall not be allowed for individual services from the public water supply main to the meter/back-flow assembly, except in special circumstances and with the written permission of the PW director or his designee. Meter/back-flow assemblies shall be located within the structure being served and remote enclosures or meter pits are not permitted.

5) When evaluating the distribution system pressure, the designer shall evaluate the system under two reservoir conditions. The system shall be evaluated with the reservoir at 50% full and at 100% full. The pressure criteria shall be satisfied for both reservoir conditions.

6) When evaluating the distribution system pressure, the designer shall also evaluate the system under the assumption that ancillary pumping systems are not running and that 100% of the water used for evaluation purposes is from reservoir storage. The pressure criteria shall be satisfied for this condition.

3.9.5 Diameter

1) Minimum Diameter of system mains shall be 8" unless both of the following conditions are met:

   a) A minimum 6" diameter main maybe permitted in a permanent cul-de-sac with no potential of being looped with no more than one fire hydrant connected and a maximum length no greater than four hundred fifty (450) feet; and a network analysis demonstrates a 6" diameter main satisfies fire flow and pressure requirements.

2) Diameter shall be sized as necessary to:

   a) Water Distribution Systems shall be designed to meet the greater of "Peak Hour" conditions; or "Peak Day" plus (+) "Fire Flow" conditions

3) Design shall limit the head loss in order to comply with the pressure requirements

listed previously in this Section.

4) Design shall limit pipe velocities to comply with the maximum velocity criteria listed previously in this Section.

5) When evaluating the distribution system for purposes of determining pipe diameters the designer shall evaluate the total system as stated in this section.

3.9.6 Fire Flows

1) All water distribution systems shall be designed to provide levels of fire protection consistent with the zoning of property served.

2) Public system fire flow requirements shall be as determined by the currently adopted IFC.

3) When evaluating the distribution system for purposes of evaluating fire flows the designer shall evaluate the system as described in this section.

4) Private fire protection systems shall be designed in accordance with the International Fire code.

3.9.7 Dead Ends

1) Dead-end mains shall be minimized by looping.

2) Dead-end mains up to six hundred (600) feet will be allowed in permanent cul-de-sacs or to promote phased construction.

3) Dead-end mains greater than six hundred (600) feet and less than twelve hundred (1,200) feet in permanent cul-de-sacs or to promote phased construction, shall only be permitted in special circumstances and require the written permission of the PW director or his designee prior to the preparation of drawings and submittal for City review. Additional cost does not constitute a special circumstance.

4) Dead-end mains longer than twelve hundred (1200) feet are expressly prohibited.

5) All dead end mains shall be terminated with a standard fire hydrant.

3.9.8 Valves

1) Valve types shall be according to the following table:

Main Size	Type of Valve
6" up to 16"	Gate Valves or Butterfly Valves
> 16"	Butterfly Valves

2) Required Locations:

a) At intersections for valve clusters;

b) On all branches of tees and crosses;

c) On the up-gradient side of all hydrant tees;

d) At pressure zone separation boundaries. A fire hydrant shall be installed at all pressure zone separation boundaries and two valves shall be installed, one on each side of the fire hydrant tee.

3) Maximum spacing in compliance with above criteria but not more than:

a) Distribution mains: four hundred fifty (450) feet maximum to coincide with hydrant spacing;

b) Transmission mains: nine hundred (900) feet maximum.

4) The location, size, and type of all valves shall be shown on the plan and profile drawings.

5) No valve or valve box shall be installed within concrete curbs, gutters, sidewalk ramps, fillets, or within ten (10) feet (clear) of sewer facilities that require encasement.

3.9.9 Fire Hydrants

1) Spacing shall be as required by the IFC , but not greater than four hundred fifty (450) feet for distribution mains or nine hundred (900) feet for transmission mains.

2) Required Locations:

a) Street intersections, within mainline valve cluster.

b) High point in the pipe profile.

c) Side lot line when spacing requires a hydrant to be located in mid-block.

d) Setback from back of curb shall be 4.0 feet minimum and 15.0 feet maximum.

e) Fire hydrants shall be located a minimum of one (1) foot clear from edge of sidewalks.

f) Pumper nozzle shall be oriented perpendicular to the least traveled street at intersection and perpendicular to the street at mid-block.

3) Flushing hydrants are not permitted.

4) The location of all fire hydrants and valves shall be shown on the plan and profile drawings.

5) No fire hydrant or valve or valve box shall be installed within concrete curbs, gutters, sidewalk ramps, fillets, or within 10 feet (clear) of sewer facilities that require encasement.

6) Fire hydrant bollards shall be provided whenever a fire hydrant is located within a travel way such as a parking lot.

3.9.10 Water Main Profile

1) Bury depth shall be measured from the finished grade to the top of the pipe per the following table:

Bury Depth Table

Pipe Diameter, Inches	Minimum Bury, Feet	Maximum Bury, Feet
12" and less	6.0	15
More than 12" and less than 20"	5.5	15
20" and larger	5.0	15

If grading occurs such that the bury depth no longer meets the required minimum or maximum depths, the water main shall be reconstructed with a new main. Insulating the existing main will not be permitted except as described below in "Use of Insulation".

2) Use of Insulation: shall not be allowed to correct deficiencies in depth or to protect water mains from freezing due to close proximity to storm sewers. The Engineer of Record may request an exception to allow use of insulation. The request shall be in writing to the Public Works director and shall detail the reasons why the main can't be lowered and describe the alternatives. The request shall be made prior to the preparation of drawings and any submittal for City review. The use of insulation will not be permitted without the written permission of the Public Works director or his designee.

3) High points in profile shall be minimized by utilizing profile grades to establish the high point. Where high points occur, fire hydrants shall be located at the high point. If in the opinion of the PW director, a hydrant would not be satisfactory, an air release valve may be required.

3.9.11 Joint Restraints and Trust Blocks

1) Thrust restraint shall be provided for each dead end, valve, bend, tee, fire hydrant, at reducers, fittings otherwise unrestrained, and where changes in pipe diameters or direction occur. The design engineer shall specify the size and shape of concrete thrust blocks. The length of restrained joint piping and details of joint restraint glands, clamps, friction slabs, or other anchors shall be as specified by the design engineer.

2) The designer shall refer to the standard specifications for the requirements and use of joint restraints and thrust blocks and shall prepare their design to comply with the requirements of the specifications. The designer shall be responsible for evaluating the soil type, bearing capabilities, and corrosion potential.

The designer shall employ a design safety factor commensurate with the site conditions and risk potential but in no case shall a safety factor of less than one and one half (1.5:1) be applied.

3) The project drawings shall contain the following minimum information:

a) For each fitting, tee, cross, etc., criteria for "Minimum Concrete Thrust Block Bearing Area" and "Minimum Concrete Volume per Thrust Block".

b) Corrosion protection for joint restraints shall be provided in accordance with the "Corrosion" section of this Manual.

c) The designer shall include a plan note indicating if a fitting installation is to be restrained or thrust blocked and, if restrained, the beginning and end of the restraint.

3.9.12 Water Mains in Relation to Sewers

Separation of water and sewer mains shall be as required by SDDENR criteria and City of Rapid City Standard Specifications.

3.9.13 Stream Crossings

For purpose of this Manual, stream shall mean all Corps of Engineer designated streams, any stream requiring a 404 permit, or as required by the City Engineer. A stream crossing shall start and end within a minimum of twenty (20) feet horizontally of the stream bank or where scour and erosion will not occur.

1) Pipe and installation shall comply with Ten States Standards, SDDENR criteria, and City of Rapid City Standard Specifications.

2) At a minimum, water main pipe shall be installed within a casing pipe, or have a concrete pipe cap installed. The designer shall provide a detailed design for the pipe cap that in general meets the following minimums:

a) Cap at a minimum shall have a width of three (3) times the diameter of the pipe;

b) Shall extend the entire length of the stream crossing;

c) Concrete shall be reinforced concrete with a minimum thickness of six (6) inches;

d) The cap shall extend vertically from the spring line of the pipe to a minimum of six (6) inches above the pipe crown.

3.9.14 Water Mains in Casing Pipes

1) Water mains in casing pipe shall have restrained joints.

2) Casing pipe shall be reinforced concrete pipe, or steel with minimum yield strength of thirty-five thousand (35,000) psi and minimum wall thickness as follows:

Diameter of Casing, Inches	Minimum Wall Thickness,* Inches
Under 14	0.188
14 & 16	0.282
18	0.312
20	0.344
22	0.375
24	0.406
26	0.436
28 & 30	0.469
32	0.500
34 & 36	0.531
38, 40, & 42	0.563

*Additional wall thickness may be required based on the design, especially in the case of long bores or poor soil conditions.

3) Casing pipe shall have an inside diameter at least six (6) inches greater than maximum outside bell diameter of the carrier main.

4) Water mains in casing pipe shall be supported with centering restraining casing chocks specifically designed for this purpose. Casing chocks shall be fabricated from non-corrosive materials. Chocks shall be installed at each side of pipe joint at the mid point of the carrier pipe joints. Maximum spacing shall not exceed ten (10) feet between chocks. Casing chock details shall be included on the drawings.

5) Casing pipe shall be sealed with prefabricated non-corrosive end seals and bands manufactured specifically for the purpose of preventing movement of ground water or backfill through the casing pipe. Grout seals of the annular space shall not be permitted.

6) Casing pipes shall be designed with a life equivalent to that of the carrier pipe. Corrosion protection shall be a component of the design of casing installations and will be required when soil resistivity tests dictate.

3.9.15 Design Calculations Submittal Requirements for Water Mains

The Engineer of Record shall submit their design assumptions and criteria used. In addition to this information, the designer shall submit the calculated Peak Hour Demand, Peak Day Demand with Fire Flow, and Average Day Demand conditions.

3.10 Regional Water Facilities

3.10.1 Administrative Requirements Pertaining to Ancillary Water Facilities

1) Ancillary Water Facilities consisting of pressure reducing stations, water booster stations (constant pressure and standard), water storage reservoirs, water supply and treatment facilities (wells and well houses, galleries, and surface water collection systems) shall comply with current City Master Plans. These types of facilities shall be designed and constructed as regional facilities, whenever feasible.

2) All proposed regional facilities with the exception of on-site systems within the City of Rapid City shall be designed, bid, and constructed by the Public Works Department. If a private developer wishes to propose a regional facility within the City of Rapid City, then the developer shall prepare a "feasibility study and analysis" for review by Public Works Department staff. Public Works staff shall prepare a proposal and recommendation for City Council consideration. If the Council is in agreement with the proposal, they shall authorize staff to allocate resources to prepare a Development Agreement. The Development Agreement shall be prepared and executed between the City and the Developer identifying the probable costs of the facility, the financial responsibilities for the facility, and schedules for design and construction. The Development Agreement shall be approved prior to submitting Preliminary Plats for review by the City staff. In cases where the City is the entity initiating the project, then council approval of a Request to Solicit Proposals for Engineering Services shall be acceptable for the purpose of initiating the project and a Development Agreement will not be required.

3) Regional facilities within the jurisdictional area of the City of Rapid City but outside of the city limits, shall comply with current city Master Plans. If facilities outside the city limits but within the jurisdictional area of the city are proposed to be operated by entities other than the City of Rapid City then authorization by the Rapid City Council to allow the facilities to be private shall be obtained prior to Preliminary Plat approval by the City Council. All proposed regional facilities with the exception of on-site systems not authorized by Council to be private shall be designed, bid, and constructed by the Public Works Department. Facilities to be designed, bid, and constructed by the Public Works Department shall meet the provisions above.

3.10.2 General Requirements

1) Regional water facilities will only be employed when the extension of off-site water mains for the appropriate pressure zone is not feasible or is not in accordance with recognized city master plans, documents, or comprehensive plans. Appendix A contains the city review/summary form for evaluation of proposed systems.

2) Consideration for regional water facilities will be evaluated by the City Public subdivisions or the Public Works Department for City initiated projects. For City initiated projects this will be accomplished through the RFP process. The Feasibility study and analysis shall be submitted to the Public Works Department and shall include the following:

a) Description of the project and purpose,

b) Provide justification for the facility and analysis of alternatives,

c) Address the facility's roles as a regional facility and projected integration into the City's identified service zones and systems,

d) The Public Works Department will review the "feasibility study and analysis" and provide written comments back to the developer, the developer may provide written response to the comments which will be incorporated into the presentation of the "feasibility study and analysis" to Council,

e) The Public Works Department will submit the "feasibility study and analysis" along with developer comments and staff recommendations to Council.

3) After a Development Agreement has been executed, then the City shall retain an Engineering Consultant in accordance with the City's adopted Consultant Selection Policy.

4) The Engineering Consultant shall provide a detailed design report. Following review by Public Works Department, the detailed design report shall be submitted to Council for approval. The detailed design report shall include the following, both for present and future design conditions:

a) Design period;

b) Population densities per acre and total population;

c) Areas served in acres;

d) Per capita contribution – average and maximum;

e) Land use;

f) Commercial and industrial contributions;

g) Design flow rates – average and peak;

h) Fire flow requirements;

i) Standby power requirements;

j) Physical address;

k) Required building permits;

l) Listing of supplemental Design Criteria.

3.10.3 Criteria for Water Booster Stations

1) Design life goal of non-mechanical components shall be seventy-five (75) years. Mechanical components shall have a design life goal of twenty-five (25) years.

2) The design report for water booster stations shall include the following for both initial and future conditions:

   a) Number, type, capacity, motor horsepower and net positive suction head (NPSH) requirements of proposed pumping units;

   b) System head curve (including head computations) for the pumping system;

   c) System head calculations and assumed C (friction) factor;

   d) Water hammer and surge analysis;

   e) Detailed design criteria for each specific Water Booster Station shall be developed by the Engineer of Record and approved by the Public Works Department;

   f) Operation and maintenance considerations shall include those items discussed and agreed upon between the Consultant and the PW Director for the specific facility;

   g) Engineering Economic Analyses, when necessary;

   h) Funding options.

3) The final design and construction documents for the water booster station facility shall incorporate specific Design Criteria determined and agreed upon between the Consulting Engineer and the PW Director.

3.10.4 Criteria for Water Storage Reservoirs

1) Design life of the storage reservoir facility shall be one hundred (100) years. Mechanical components shall have a design life goal of twenty-five (25) years.

2) The design report for water storage reservoirs shall include the following for both initial and future conditions:

   a) Type of facility, elevated, ground level, buried, etc.,

   b) Reservoir materials and structure,

   c) Site and facility aesthetics,

   d) Geotechnical engineering site evaluation and considerations,

   e) Site evaluations, alternatives, availability,

f) Detailed design criteria for each specific water storage reservoir shall be developed by the Engineer of Record and approved the Public Works Department,

g) Operation and maintenance considerations to include provisions for accessibility, facility and site operation and maintenance considerations, provisions for equipment replacement and maintenance and upgrades, availability of replacement parts, reservoir coatings, maintenance considerations, and security considerations,

h) Engineering economic analysis,

i) Funding options.

3) The final design and construction documents for the facility shall incorporate the design criteria developed and agreed upon between the Consulting Engineer and the Public Works Director.

3.10.5 Criteria for Source Water Facilities Consisting of Wells and Well Houses and Infiltration Galleries

1) Design life goal of the source water facility shall be seventy-five (75) years. Mechanical components shall have a design life goal of twenty-five (25) years.

2) The design report shall include the following for both initial and future conditions:

a) Description of the proposed water source including geology, hydrology, reliability, aquifer characteristics (draw downs, sediment transport, water quality and quantity), applicable regulations, etc.;

b) Number, type (line shaft and submersible), capacity, motor horsepower and requirements of proposed pumping units;

c) System head curve (including head computations) for the pumping system;

d) System head calculations and assumed C (friction) factor;

e) Treatment methods (disinfections, filtration, etc.) utilizing best available technology treatment practices. Includes addressing chemical availability and solids, and residuals handling;

f) "CT" analysis for disinfection;

g) Water hammer and surge analysis;

h) Detailed design criteria for each specific facility shall be developed by the Engineer of Record and approved by the Public Works department;

i) Well borehole size recommendations, casing material, screens recommendations;

j) Probability of flowing wells or artesian conditions, address design challenges associated with these types of facilities;

k) Test pumping and well development recommendations;

l) Water rights/acquisition shall be addressed at the time the report is submitted for review;

m) Facility plan preparation;

n) Funding sources.

3) Operation and maintenance considerations to include provisions for accessibility, building and site operation and maintenance considerations, provisions for equipment replacement and maintenance, upgrade, and availability of replacement parts. Power costs and overall facility efficiency, flow metering provisions. Need for visible or audible screening of facilities, including items not inside buildings, shall be identified and discussed in the report.

4) The final design and construction documents for the facility shall incorporate the following design criteria:

a) Site Design,

b) Facility design,

c) Operations and maintenance manuals and as-constructed drawings.

3.10.6 Criteria for Surface Water Treatment Facilities

Specific criteria will be developed by the Public Works Department after the City authorizes design work for the facility.

3.10.7 Criteria for Pressure Reducing Facilities

1) Design life of the pressure reducing facility shall be designed to achieve a design life goal of seventy-five (75) years. Mechanical components (not buried) shall be designed to achieve a design life goal of twenty-five (25) years.

2) Prior to design, pressure reducing stations must be approved by the Public Works director or their designee. Pressure reducing stations shall not be permitted on water mains or lines having a normal working pressure less than one hundred thirty-five (135) psi. Pressure reduction in mains having working pressures less than one hundred thirty-five (135) psi shall be accomplished by using individual pressure reducing valves on individual service lines.

3) Approved pressure reducing stations shall meet the following minimum criteria:

a) Contain a minimum of two (2) pressure reducing valves operating in parallel. The smaller valve shall be sized for full open operation at 1/3 of the design flow. The larger valve be sized for full open operation at 2/3 of the design flow. Design flow shall be the Peak Day plus Fire Flow;

b) Internal by-pass piping and valving around each pressure reducing valve shall be provided;

c) External by-pass piping and valving around each pressure reducing valve shall be provided;

d) Prefabricated, below-grade steel structures, shall be cathodically protected, exterior insulated, ventilated, heated, dehumidified, and provided with sump and sump pump when necessary.

4) The site shall be provided with the following:

a) Parking space for at least one maintenance vehicle adjacent to the station;

b) A paved surface of approximately one hundred (100) square feet at and around the station entrance hatch;

c) Guard-posts with spacing and location as necessary to protect the access hatch, electrical equipment and accessory equipment.

5) The design report shall include the following for both initial and future conditions:

a) Description of proposed facility including the system hydraulics;

b) Number, type of pressure reducing valves;

c) System head curve including loss computations for pressure reducing station;

d) System head calculations and assumed C (friction) factor;

e) Detailed design criteria for each specific facility shall be developed by the Engineer of Record and approved by the Public Works director or his designee.

3.11 CORROSION CONTROL

See Corrosion Control Design Criteria Manual Section.

Table 3-1
Water Junction Node Design Computation Form

Project: _____

Designed: _____ Date: _____

Junction Label	Elevation (ft)	Static Pressure (psi)	Peak Hour		Peak Day		Peak Day w/ Fire Flow			
			Demand (gpm)	Pressure (psi)	Demand (gpm)	Pressure (psi)	Total Flow Available (gpm)	Residual Pressure (psi)	Minimum System Pressure (psi)	Minimum System Junction Label

Note: Include schematic drawing identifying location of pipe and junction labels. Sheet: _____ of _____

Table 3-2
Water Pipe System Design Computation Form

Project: _____

Designed: _____ Date: _____

Pipe Label	Junction Label		Length (ft)	Diam (in)	"C" Factor	Discharge			Velocity		
	from	to				Ave Day (gpm)	Peak Hour (gpm)	Peak Day w/ Fire Flow (gpm)	Ave Day Velocity (fps)	Peak Hour Velocity (fps)	Peak Day w/ Fire Flow Velocity (fps)

Note: Include schematic drawing identifying location of pipe and junction labels.

Sheet: _____ of _____

3.12 WASTEWATER COLLECTION SYSTEM

3.12.1 Design life

The design life goal for sewer collection systems: All proposed sewer collection systems shall be designed with a minimum design life goal, for the hardware components, of seventy five (75) years.

3.12.2 Design flow

1) Flow requirements shall be in accordance with current Utility System Master Planning Documents or Reports. In the absence of current Master Planning Documents or Reports, per capita flows shall be used for residential and multi-family land uses and standard flow generation criteria from the SDDENR shall be used for commercial, industrial and public land uses.

Residential* : $Qave = ((QP \times PH \times DU \times A) / 24)/60$

$Qave\ (total) = \Sigma\ Qave\ (for\ each\ land\ use)$

*Equation to be used for residential and multi-family land uses.

Where: Qave = Average calculated wastewater flow in gallons per minute (gpm).

QP = Design flow; gallons per capita per day (gpcpd). In the absence of Current Master Planning Documents or Reports use one hundred (100) gpcpd.

PH = Population per household (pph). In the absence of current Master Planning Documents or Reports use 2.65 pph.

DU = Dwelling units per acre. Use future land use plans. In the absence of future land use plans request recommended land use projections from Rapid City Growth Management Department.

A = Area in acres. The designer may apply a reduction factor to the area if topography will not allow for the property to be fully developed in accordance with future land use plan. The use and magnitude of a reduction factor requires authorization from the City Engineer.

Commercial** $Qave = QA \times A$

$Qave\ (total) = \Sigma\ Qave\ (for\ each\ land\ use)$

** Equation to be used for commercial, industrial, and public land uses.
Where: Qave = Average calculated wastewater flow in gallons per minute (gpm).

QA = Design flow; gallons per minute per acre (gpm/ac). In the absence of current Master Planning Documents or Reports use 3 gpm/ac for

commercial & industrial land uses and use 2 gpm/ac for public land uses.

A = Area in acres. The designer may apply a reduction factor to the area if topography will not allow for the property to be fully developed in accordance with future land use plan. The use and magnitude of a reduction factor requires authorization from the City Engineer.

Notes: For areas consisting of multiple land uses, the designer shall calculate the Qave for each land use and sum the Qave(s) to establish the total Qave.

2) Peak Design Flows: Using the current Master Planning Documents or reports or in the absence of current Master Planning Documents or reports, the following criteria shall be used:

Where: Qpeak = Qave x PF x RF

Qpeak = Peak calculated wastewater flow in gallons per minute (gpm)

Qave = Average design flow; gallons per minute (gpm) derived from above equations

PF = Peaking factor; Use 4.2 for residential and multi -family, 1.7 for commercial & industrial land uses, and 1.2 for public land uses.

RF = Reduction Factor; For areas primarily residential the following RF's may be used:

Table - Residential Reduction Factors

Population Served	RF
<500	1.0
501 – 1,000	.955
1,001 – 2,000	.905
2,001 – 5,000	.86
5,001 – 10,000	.775
>10,001	.72

Derived from Figure #1 "Ratio of Extreme Flow to Daily Average Flow", SDDENR Design Criteria Manual.

Table - Commercial/Industrial Reduction Factors

Area (acres) Served	RF
<1000	1.0
1,001 – 2,000	.95
2,001 – 5,000	.85
>5,001	.71

Derived from "Gravity Sanitary Sewer Design and Construction", ASCE Manual of Practices – No. 60, 1982.

Notes: For areas consisting of multiple land uses, the designer shall calculate Qave and Qpeak for each land use. When applying a Reduction Factor (RF) for sizing the sewer main. The designer shall apply the RF incrementally based on the above tables from the farthest downstream location up to the point where an RF will not be applied. This methodology may require the use of multiple RF's.

3.12.3 Sewer Main Layout

1) Position in ROW shall be in accordance with these criteria.

2) Relationship to other (private) utilities: other (private) utilities (parallel to sewer mains) shall maintain a minimum five (5) foot horizontal separation from the water main. Other (private) utilities shall attempt to cross water mains at right angles to obtain the five (5) foot separation as soon as practical. Sewer and water main separation shall meet the requirements as established elsewhere in this section.

3.12.4 Minimum Size

1) No gravity sewer main shall be less than eight (8) inches in diameter.

2) The sewer main shall be sized so that the Qpeak flow does not exceed the following:

Qpeak d/D ratio ≤ 0.70

Where: d = depth of Qpeak flow in the sewer main

D = diameter of the sewer main

3) Upstream sewer mains shall not be larger in diameter than the downstream sewer. The Engineer of Record may request an exception to this requirement. The request shall be in writing, to the Public works director or his designee, and shall be made prior to the preparation of drawings and any submittal for City review.

3.12.5 Depth

1) Interceptor sewers (no services) shall have a minimum depth of four (4) feet over top of pipe, or when not possible, berms or insulation may be used.

2) Collector Sewers shall have a minimum depth as follows:

a) Five (5) feet over the top of the pipe;

b) As necessary to have top of the main one (1) foot below the invert of the service line at the main.

3.12.6 Slope

1) Minimum slope shall be established to provide flow velocities greater than 2.0 fps for design peak flows, but not less than recommended in Ten States Standards and SDDENR recommended Design Criteria.

2) Deviations from the minimum slope may be permitted, down to average daily flow velocities of 1.8 fps, with written approval of the Public Works Director or his designee.

3) Maximum slopes on mains shall not exceed a slope creating a velocity of ten (10) fps at half pipe depth. Greater velocities may be permitted with written approval from the Public Works director or his designee. Deviations from the maximum slope on all mains with velocities in excess of ten (10) fps at half pipe depth, may be considered, if manholes with energy dissipating structures of the vortex type are utilized. Mains with slopes greater than twenty percent (20%) or with velocities greater than ten (10) fps at half pipe depth shall be anchored according to the requirements of the Ten State Standards and SDDENR Recommended Design Criteria.

4) Because of the nature of the material being conveyed in a sewer, an "n" value less than 0.013 is not recommended, therefore Friction factors ("n") values less than 0.013 are not permitted.

5) Manholes shall be located at all changes in slope. Refer to Figure 3-10 for sewer mains twenty-four (24) inches and larger in diameter. It is desirable to maintain a constant slope on sewer mains of the same diameter over long segments containing multiple manholes. It is also desirable to minimize having steeper slopes segments upstream from segments with flatter slopes. Additional burial depth of sewer main is not sufficient justification to disregard these recommendations.

6) All changes in pipe diameter shall be made at manholes. Changes in pipe diameter, at a minimum, shall be accomplished by matching the crown of the outlet pipe with the crown of the lowest inlet pipe crown.

7) The pipe slope shall be calculated from the inside edge of manhole to inside edge of manhole using the design invert elevations, (rise/run). The run shall be calculated from inside edge of manhole to inside edge of the next manhole.

3.12.7 Alignment

1) All changes in direction shall be made at manholes. Refer to Figure 3-10 for sewer mains twenty-four (24) inches and larger in diameter.

2) Deflecting the pipe at joints to change alignment or slope shall not be permitted.

3) Branches or sewer laterals extending from sewer mains shall begin at manholes.

3.12.8 Sewer Main Material

1) Sewer mains shall be the following material, meeting the requirements of the Standard Specifications.

2) The design engineer shall address coatings or other corrosion protection measures for the pipe in order to achieve the design life goals.

3.12.9 Sewer Manholes

1) Position in ROW shall generally be as shown in Figures in this Manual.

2) Maximum spacing shall be four hundred (400) feet for sewers fifteen (15) inches or less. Distances up to four hundred fifty (450) feet may be allowed if justification is provided by the designer and approval is granted by the Public Works director or his designee. Maximum spacing for sewers eighteen (18) inches and larger shall be five hundred (500) feet.

3) Minimum manhole diameter shall be forty-eight (48) inches. For sewer mains twenty-four (24) inches and larger in diameter, manholes shall be pre-cast tee's with a minimum of forty-eight (48) inches vertical riser.

4) Manholes 5.5 feet and greater in depth, measured from invert to rim, shall have eccentric cone top sections per the detail in Standard Specifications. Manholes less than 5.5 feet in depth shall have flat concrete covers designed for AASHTO H-20 wheel loading as shown in the detail in the Standard Specifications.

5) Invert channel slope or drop shall be the greater of the following:

   a) Minimum slope through a manhole shall not be less than the average of "the slope in" and "the slope out", but in no case shall be less than what is required below.

   b) Manholes placed at changes in horizontal alignment less than forty-five (45) degrees shall not have a drop less than 0.10 feet across the manhole. Manholes placed at changes in horizontal alignment greater then forty-five (45) degrees shall not have a drop less than 0.15 feet across the manhole.

6) The designer shall select the type of frame and cover in accordance with the Standard Specifications. The opening of the eccentric cone section shall be centered over the inlet sewer main. In cases where there are more than one inlet, the opening of the eccentric cone section shall be centered between the inlet mains.

7) Steps shall not be provided for sanitary sewer manholes.

8) Sewer mains shall terminate with a manhole. Cleanouts shall not be permitted.

9) Services less than eight (8) inches in diameter shall not be connected to manholes, except monitoring manholes for industrial and commercial users, as required by the Rapid City Industrial Waste program, will be allowed to connect a single six (6) inch service to such a manhole.

10) Manholes located outside of paved surfaces shall be designed such that positive drainage will be maintained away from the manhole.

3.12.10 Drop Manholes

Drop manholes should be avoided whenever reasonably possible, to avoid excessive depth and will only be allowed with written permission of the Public Works director or his designee. Internal drop manholes will not be allowed under any circumstances.

3.12.11 Sewer Mains in Casing Pipes

1) Sewer mains in casing pipe shall have restrained joints.

2) Casing pipe shall be reinforced concrete pipe, or steel with minimum yield strength of thirty-five thousand (35000) psi and minimum wall thickness as follows:

Diameter of Casing, Inches	Minimum Wall Thickness,* Inches
Under 14	0.188
14 & 16	0.282
18	0.312
20	0.344
22	0.375
24	0.406
26	0.436
28 & 30	0.500
32	0.500
34 & 36	0.531
38, 40, & 42	0.563

*Additional wall thickness may be required based on the design, especially in the case of long bores or poor soil conditions.

3) Casing pipe shall have an inside diameter at least six (6) inches greater than the maximum outside bell diameter of the carrier main.

4) Sewer mains in casing pipe shall be supported with centering and restraining casing chocks, specifically designed for the purpose. Casing chocks shall be fabricated from non-corrosive materials. Chocks shall be installed at each side of pipe joint, at the mid point of the carrier pipe between pipe joints, and maximum spacing shall be ten (10) feet between chocks. Casing chock details shall be included on the design drawings.

5) Casing pipe shall be sealed with prefabricated, non-corrosive, end seals and bands manufactured specifically for the purpose of preventing movement of

ground water or backfill through the casing pipe. Grout seals of the annular space shall not be permitted.

6) Corrosion protection shall be a component of the design of casing installations.

3.12.12 Stream Crossings

1) For purposes of this Manual, stream shall mean all Corps of Engineer designated streams, any stream requiring a 404 Permit, or as required by the City Engineer. A stream crossing is defined to start and end within twenty (20) feet of the stream bankor where scour and erosion will not occur.

2) Pipe and installation shall comply with Ten States Standards, SDDENR criteria, and City of Rapid City Standard Specifications.

3) The sewer main pipe shall be installed within a casing pipe, or have a concrete pipe cap installed. When utilizing a pipe cap, the designer shall provide a detailed design for the pipe cap meeting the following:

   a) Cap shall have a width of three (3) times the diameter of the pipe;

   b) Cap shall extend the entire length of the stream crossing;

   c) Concrete shall be reinforced concrete with a minimum thickness of six (6) inches;

   d) Cap shall extend vertically from the spring line of the pipe to a minimum of six (6) inches above the pipe crown.

3.12.13 Sewers in Relation to Water Mains

1) Separation of water and sewer mains shall be as required by SDDENR criteria and City of Rapid City Standard Specifications.

2) When the separation requirements of Ten State Standards cannot be satisfied at crossings of water and sewer mains, one of the mains shall be encased in low strength concrete.

3.12.14 Hydrogen Sulfide Generation Analysis for Sanitary Sewer Mains

1) Sanitary sewer mains shall be analyzed for hydrogen sulfide (H2S) generation. The designer shall evaluate H2S generation in accordance with "ASCE – Manuals and Reports on Engineering Practice – No. 60 titled Gravity Sanitary Sewer Design and Construction". For gravity sanitary sewer mains twenty-four (24) inches in diameter and smaller the following "Z" formula shall be used:

$$Z = (EBOD / (S1/2 \times Q1/3)) \times (P/B)$$

Where:

Z = Defined Function Value for H2S generation
S = Hydraulic Slope (ft/ft)
Q = Discharge Volume (cfs)
P = Wetted Perimeter (ft)
B = Surface Width (ft)
EBOD = Effective BOD (mg/l)

Hydrogen Sulfide Condition Values

Z Value	Condition Description
Z < 8,000	Rare H2S generation potential
5,000 ≤Z ≤10,000	Marginal H2S generation potential
Z > 10,000	Common H2S generation potential

2) The design engineer shall analyze the sanitary sewer collection system for H2S generation. For gravity sanitary sewer mains twenty-four (24) inches in diameter and smaller, the above equation and the following variable values shall be used:

S The designer shall use the flattest slope in the system being analyzed.
Q The designer shall analyze H2S generation at the following flow conditions:

1% of Qpeak
5% of Qpeak
25% of Qpeak
75% of Qpeak
95% of Qpeak
100% of Qpeak
105% of Qpeak

3) The designer shall analyze H2S generation at the following flow conditions:

EBOD = 300 mg/l (residential, multi-family, & public land uses)
EBOD = 500 mg/l (commercial & industrial land uses) *

*For commercial and industrial applications, the designer may be required to use a larger more specific EBOD, as identified by the industrial waste survey.

4) For systems classified as "Marginal H2S generation potential" or "Common H2S generation potential", the design engineer shall incorporate and supplement the Standard Specifications to provide additional system protection against H2S attack. The design engineer shall establish recommendations that meet the intent of achieving the established design life goals. The use of coatings, the installation of venting devices, chemical addition, or mechanical aeration are examples of additional protection measures.

5) The designer shall evaluate H2S generation for gravity sewers larger than twenty-four (24) inches in diameter in accordance with "ASCE – Manuals and Reports on Engineering Practice – No. 60 titled Gravity Sanitary Sewer Design and Construction".

6) The Engineer of Record shall submit their design assumptions, criteria used, and reference their design resources as a condition of plans approval. In addition to this information, the designer shall submit the information indicated in Table 3-3.

3.13 Regional Wastewater Facilities

3.13.1 General

1) Ancillary Wastewater Facilities consisting of Lift Stations, Wastewater Treatment Facilities including but not limited to mechanical treatment plants and lagoons, on-site systems, and Alternative Wastewater Collection Systems shall comply with current City Master Plans and Public Works' general philosophy of system integration. These types of facilities shall be designed and constructed as regional facilities whenever feasible.

2) All proposed regional facilities with the exception of on-site systems and Alternative Wastewater Collection Systems within the City of Rapid City shall be designed, bid, and constructed by the Public Works Department. If a private developer wishes to propose a regional facility including on-site systems and Alternative Wastewater Collection City of Rapid City then the developer shall prepare a "feasibility study and analysis" for review by Public Works Department staff. Pubic Works staff shall prepare a proposal and recommendation for City Council consideration. If the Council is in agreement with the proposal they shall authorize staff to allocate resources to prepare a Development Agreement. The Development Agreement shall be prepared and executed between the City and the Developer identifying the probable costs of the facility, the financial responsibilities for the facility, and schedules for design and construction. The Development Agreement shall be approved prior to submitting Preliminary Plats for review by City staff. In cases where the City is the entity initiating the project, Council approval of a Request to Solicit Proposals for Engineering Services shall be acceptable for the purpose of initiating the project and a Development Agreement will not be required.

3) Regional Facilities within the jurisdictional area of the City of Rapid City but outside of the city limits shall comply with current City Master Plans and Public Works Department general philosophy of system integration. If Facilities outside the City limits but within the jurisdictional area of the City are proposed to be operated by entities other than the City of Rapid City then authorization by the Rapid City Council to allow the facilities to be private shall be obtained prior to Preliminary Plat Approval by City Council. All proposed regional facilities with the exception of on-site systems and Alternative Wastewater Collection Systems not authorized by Council to be private shall be designed, bid, and constructed by the Public Works Department. Facilities to be designed, bid, and constructed by the Public Works Department shall meet the provisions above.

3.13.2 Regional Wastewater Facilities

Regional Wastewater Facilities will only be employed when the extension of offsite gravity sanitary sewer mains for the appropriate drainage basins is not feasible or is not in accordance with recognized City master plans, documents or comprehensive plan; otherwise pump stations will not be afforded consideration. Appendix A contains the City review/summary form for evaluation of proposed systems.

1) Consideration for regional wastewater facilities will be evaluated by the City Public Works Department from a "feasibility study and analysis" prepared by the developer for subdivisions or the Public Works Department for City initiated projects. For City Initiated projects this will be accomplished through the P process. The feasibility study and analysis shall be submitted to the Public Works Department and shall include the following:

    a) Description of the project and purpose;

    b) Provide justification for the facility and analysis of alternatives;

    c) Address the facility's role as a regional facility and projected integration into the City's identified service basins and systems;

    d) The Public Works Department will review the "feasibility study and analysis" and provide written comments back to the developer;

    e) The developer may provide written response to the comments, which will be incorporated into the presentation of the "feasibility study and analysis" to Council; and

    f) The Public Works Department will submit the "feasibility study and analysis" along with developer comments and staff recommendations to Council.

2) After a Development Agreement has been executed then the City shall procure an Engineering Consultant in accordance with the City's adopted Consultant Selection Policy.

3) The Engineering Consultant shall provide a detailed design report. Following review by the Public Works Department the detailed design report shall be submitted to Council for approval. The detailed design report shall elaborate on the following for both present and future conditions:

    a) Design period;

    b) Population densities per acre and total population;

    c) Areas served in acres;

    d) Per capita contribution – average and maximum;

    e) Land use;

f) Residential, commercial and industrial contributions;

g) Design flow rates – average and peak;

h) Standby power;

i) Infiltration;

j) Annual project operation and maintenance costs for the proposed facility; and

k) Supplemental Criteria as described below.

3.13.3 Criteria for Wastewater Lift Stations

1) Design life of non-mechanical components shall be designed to achieve a design life goal of seventy-five (75) years. Mechanical components shall be designed to achieve a design life goal of twenty-five (25) years.

2) The design report shall include the following for both initial and future conditions:

a) Number, type, capacity, motor horsepower and net positive suction head (NPSH) requirements of proposed pumping units;

b) System head curve (including head computations) for the pumping system;

c) System head calculations shall include the size and length of force main and assumed C (friction) factor;

d) Sewage detention time in the wet wells and force main;

e) Odor control potential shall be evaluated and addressed;

f) Detailed design criteria for each specific lift station shall be developed by the Engineer of Record and approved by the Public Works Department;

g) Operation and maintenance considerations to include provisions for:

1) Accessibility;

2) Building and site operation and maintenance considerations;

3) Provisions for equipment replacement and maintenance and upgrades;

4) Availability of replacement parts;

5) Power costs and overall facility efficiency;

6) Flow metering provisions; and

7) Need for visible or audible screening of facilities, including items not inside buildings' shall be identified and discussed in the report.

h) Engineering Economic Analysis;

i) Funding Options.

3) The final design and construction documents for lift station facilities shall incorporate all elements determined in the report phase.

3.13.4 Criteria for Individual On-Site Wastewater Facilities

1) On-site wastewater facilities as defined by the City of Rapid City Municipal Code shall be designed and constructed in accordance with the provisions of the SDENR.

2) The criteria in this section are not intended to modify or eliminate subdivision improvements as required in Title 13 and 16 of the City of Rapid City Municipal Code.

3.13.5 Criteria for Wastewater Mechanical Treatment Plants and Lagoons

These facilities are very specialized and are very site specific. Design criteria will be developed by the Public Works Department and the design engineer after the project has been identified and after the City authorizes design work for the facility.

3.13.6 Reserved for Pretreatment Systems

3.14 Alternative Collection Systems

3.14.1 Criteria for Subdivisions with Pressure Sewer Systems

1) Systems identified under these provisions require Council authorization prior to consideration of review by staff.

2) When the subdivision plat is recorded, a miscellaneous document shall be recorded at the Register of Deeds office for each property to be connected to a common force main. The miscellaneous document shall identify the design parameters including the anticipated flows, pumping rates, pipe line sizing calculations for pressure main, head loss calculations for friction and other minor losses (valves, fittings, etc.), maximum static and total dynamic head at each lot, minimum elevation (relative to the finished floor) each grinder pump can be set for each lot, and recommended grinder pump model and manufacturer. Other grinder pumps may be proposed which meet the requirements of the design parameters.

3) Pressure sewer systems shall meet the SDDENR's requirements set forth in their Recommended Design Criteria Manual – Wastewater Collection and Treatment Facilities, Chapter III, Section R, and shall be submitted to SDDENR for their approval. SDDENR criteria shall be supplemented as follows:

4) The designer shall incorporate the applicable criteria under Section 3.6.7 as it applies for Individual Pumping Stations;

a) No pressure sewer main shall be less than 1 ¼ inches inside diameter and shall be sized to maintain a minimum scouring velocity of 2.5 feet per second at all points in the system;

b) In the pressure sewer mains, clean-out connections shall be provided at distances not to exceed five hundred (500) feet;

c) Operating pressures in general shall not exceed a range of forty (40) to fifty (50) psig for any appreciable period of time. Additionally, grinder pumps shall have the characteristics which will continue to produce flows of at least eight (8) gpm if heads rise temporarily to fifty (50) psig;

d) The minimum net storage capacity of the grinder pump unit shall not be less than fifty (50) gallons;

e) An Engineer's report shall be submitted to the City and DENR per DENR's criteria, including but not limited to service area, anticipated flows, pumping rates, pipe line sizing calculations for pressure main, head loss calculations for friction and other minor losses (valves, fittings, etc.), maximum static and total dynamic head at each lot, and minimum elevation grinder pump can be set for each lot;

f) Pressure sewer mains (within the City Limits) will become part of the City's sanitary sewer system and are to be located within the street right-of-way at least ten (ten) feet from property lines. The pressure service line from the pumping unit to the point of connection to the pressure sewer main will remain private and the obligation of the property owner;

g) Pressure sewer pipe, fittings, and valve materials shall meet the City of Rapid City Standard Specifications for water mains, with appropriate pressure rating for design heads for given site. The Engineer of Record shall identify appropriate alternate pipe materials for pressure sewer mains less than four (4) inches in diameter. These materials at a minimum shall meet the requirements of the plumbing code currently adopted by the City of Rapid City;

h) The pressure sewer main shall be buried not less than six (6) feet deep to the top of the pipe, including service line beginning at the pump unit discharge port, and installed such that at least six (6) feet of earth cover over the top of the pipe will be provided upon completion of all grading and construction;

i) Each service line shall have a full-diameter ¼ turn plug valve and curb box to be located in the public right-of-way from one (1) to seven (7) feet from the property line. The cover of the curb box shall be clearly marked with the letter "S";

j) A system of grinder pumps connected to a common pressure sewer main shall be supplied by a single manufacturer;

k) Each lot shall have an individual packaged pumping unit with a duplex pump system. The pumping units shall be manufactured as a complete unit including grinder pumps two (2), dual check valves, tank, alarms and all necessary controls packaged into a single unit. The control panel for the packaged pump unit shall be mounted in the interior of the building being served by the sanitary sewer. Each unit shall include an exterior visual alarm and an audible alarm within the building being served. The alarms shall have multiple "trip" settings including but not limited to high level (prior to overflow), high level in the overflow tank, pump failure, and pump electrical overload. Pumps shall be equipped with automatic reset after electrical overload;

l) Each packaged grinder pump unit shall be an exterior unit and shall be located on the lot such that the top of the access hatch is located vertically a minimum of one (1) foot below the lowest floor elevation requiring sanitary sewer service;

m) Each system shall have an emergency overflow tank with a minimum capacity of five hundred (500) gallons. Adequate provisions should be made to empty the overflow tank when necessary;

n) The structure being served shall have an accessible backwater valve on the gravity discharge prior to the grinder pump; and

o) Start-up, testing, and certification that each pumping unit has met the design plans and specifications shall be the responsibility of the Coordinating or Prime Professional Engineer, and such testing and certification shall be performed and submitted to the City before a Certificate of Occupancy will be issued for the building being served.

Table 3-3
Sanitary Sewer System Design Computation Form

Project: _____

Designed: _____ Date: _____ Sheet: ____ of ____

Line No	Location	Manhole No.				Length (ft)	"n" value	Area		Sewage		Slope of sewer (%)	Pipe Diam (D) (in)	Q (peak)			Q (ave)	
		From	Invert Drop (ft)	To	Invert Drop (ft)			Increment (acres)	Total (acres)	Q (peak) (gpm)	Q (ave) (gpm)			depth (d) (in)	velocity (fps)	d/D	depth (in)	velocity (fps)

3.15 Water and Sewer Services

3.15.1 General

1) Separate service lines shall be provided for each dwelling unit. Refer to figures contained in this section of the manual.

2) All water and sewer lines, including private systems, must run at right angles to the street and may not run in the ROW parallel to the street. Service lines shall not cross adjoining property lines and shall connect to mains fronting the property. Private service lines may not cross adjoining properties even if they are located in private easements. Where service lines are being replaced to ring property into compliance, the new service line shall connect to a main at the front of the property even if that requires a main extension.

3) Water and sewer service line connections shall be designed to be in separate trenches that have a ten (10) foot separation. Exceptions to these criteria may be granted for trenches excavated in rock. Requests for exception must provide the following: the sewer service must be located eighteen (18) inches below the water service and must have a twelve (12) inch horizontal separation or the water service line must be installed in a watertight casing pipe. Reconnecting existing service lines is not allowed unless they meet the separation requirements of a new installation.

4) Existing service lines may be used for a new building only if they are examined by thePublic Works department and are found to comply in all respects with this Section. Sewer service shall also be tested per City standards.

3.15.2 Water Services

Service lines shall be designed in accordance with the currently adopted plumbing code of the City of Rapid City.

3.15.3 Meter Vaults

1) Meter vaults will not be permitted for water service to property which has a structure located on that property.

2) For water service to property such as parks, cemeteries, and athletic fields which properties have no structures, above grade meter enclosures shall be utilized. Meter enclosures shall not be located in the ROW.

3) Meter vaults may be permitted with written approval of the Public Works director or his designee. Detailed drawings by a Registered Professional Engineer, of the proposed facility, shall be submitted at the time of the request.

4) Meter vaults shall not be located in ROW. As condition of approval for a meter vault, the property owner shall provide the City with an access easement to the vault.

5) Meter vaults for one (1) inch and smaller meters shall be prefabricated and pre-assembled, eighteen (18) inches in diameter PVC with minimum wall thickness

of 0.30", and shall have setter pre-mounted on a movable platform. Meter box shall be Therma-Coil as manufactured by Mueller/McCullough or equal, and shall be equipped with cast iron lid, insulating pad, and provisions for remote reader cable. Field constructed as assembled meter vaults are not permitted.

3.15.4 Backflow and Cross Connection Prevention

Backflow and cross connection prevention shall be governed by the requirements of the currently adopted plumbing code.

3.15.5 Fire Service Line

Fire services shall meet the requirements the IFC.

3.15.6 Sewer Services

1) Service lines shall be designed in accordance with the currently adopted Plumbing Code.

2) Taps on sewer mains shall not exceed six (6) inches in diameter. Service lines greater than six (6) inches in diameter shall be connected to the main with a manhole.

3) Services four (4) inches and six (6) inches in diameter shall be tapped directly to the main and not connected to manholes.

4) Foundation drains, roof drains, area drains, storm drains,sump pumps, and other sources of surface or ground water shall not be connected to sanitary sewers.

3.15.7 Individual Pumping Stations

1) The designer shall incorporate the applicable criteria under Section 3.5.15 as it applies for individual pumping stations.

2) A privately owned pumping station may serve no more than one parcel of property.

3) Individual pumping stations, except those serving a single family residence or duplex, shall be designed by a Professional Engineer.

4) Review and approval: Plans and specifications for individual pumping stations shall be submitted to the Public Works department for review and acceptance.

5) Individual pumping stations shall be of the grinder pump type. Septic tank effluent pumps (STEP) shall not be permitted due to the anaerobic quality of septic tank effluent, and solids handling pumps shall not be permitted due to the need to minimize pressure service line diameters in order to provide velocities equal to or greater than 3.0 fps.

6) Pump cycle: Individual pumping stations shall be designed to provide pump cycle times no greater than three (3) hours at average daily flow rates based on one hundred (100) gal/per capita/day.

3.15.8 Pressure service lines

1) The designer shall incorporate the applicable criteria under Section 3.5.15 as it applies for individual pumping stations;

2) Material: PVC, ASTM 2241, Pressure Class 200, gasketed ends;

3) Minimum diameter: 1 ¼ inches;

4) Velocity: Minimum velocity shall not be less than 3.0 fps when the pump is operating at the midpoint of its normal operating range. Maximum velocity shall not be more than ten (10) feet per second (fps);

5) Minimum depth of burial shall be six (6) feet;

6) Isolation valve: for pressure services connecting to a pressure main an isolation valve with valve box shall be installed in the ROW between one (1) and seven (7) feet of the property line. Isolation valve shall be resilient-seated gate valve. Pressure services connecting to a gravity main are not required to have an isolation valve; and

7) Testing shall be performed in accordance with water main pressure testing provisions of Section 8 of the City of Rapid City Standard Specifications.

3.15.9 Abandoning Services

1) Water or sewer services shall be abandoned if they meet one or more of the following conditions:

   a) They are replaced or reconstructed;

   b) They serve structures which are removed from their foundations, vacated, or demolished except as permitted in the Rapid City Municipal Code;

   c) They are a service stub-out to an undeveloped lot or on which a structure was constructed and served by another service line; and

   d) They are extra service line(s) resulting from re-platting two (2) or more lots into a single lot or from combining two (2) or more lots into a developmental lot.

2) Services shall be abandoned by disconnecting them from the main as required by the City of Rapid City Standard Specifications.

3) Water services:

   a) Water service lines permanently removed from service, smaller than one (1) inch in diameter, or constructed of materials not complying with the City

of Rapid City Standard Specifications shall be abandoned at the water main by closing the corporation stop and disconnecting the service line from the corporation and capping the corporation.

b) Curb boxes shall be removed when the service line is abandoned at the main.

c) Water service lines (1) inch and larger which are constructed of materials complying with the City of Rapid City Standard Specifications, which will be reactivated withinone (1) year of abandonment, and which will provide sufficient volume and pressure for their intended use shall be abandoned by closing the curb stop and cutting and plugging the service line on the property side of the curb stop. If, at the end of one (1) year following abandonment, the service line is not reactivated, then the City Engineer may either grant a time extension not to exceed the one (1) year limitation or require immediate abandonment at the main.

3.15.10 Sewer Services

1) Abandoned sewer service lines permanently removed from service, or less than four inches diameter, or constructed of materials not complying with the City of Rapid City Standard Specifications shall be abandoned at the sewer main by disconnecting the service line from the main by removing the service pipe from the tap and plugging the tap.

2) Abandoned sewer service lines four (4) inches diameter and larger which are constructed of materials complying with the City of Rapid City Standard Specifications, which will be reactivated within one (1) year of abandonment, and will have sufficient capacity for their intended use shall be abandoned by cutting and plugging the service line at the property. If, at the end of one (1) year following abandonment, the service line is not reactivated, then the City Engineer may either grant a time extension not to exceed the one (1) year limitation or require immediate abandonment at the main.

3.15.11 Private Fire Protection Systems

Private fire protection systems are beyond the scope of this document. Consult the IFC for guidance.

End of Section

FIGURE 3–1

STANDARD UTILITY PLACEMENT IN R.O.W.

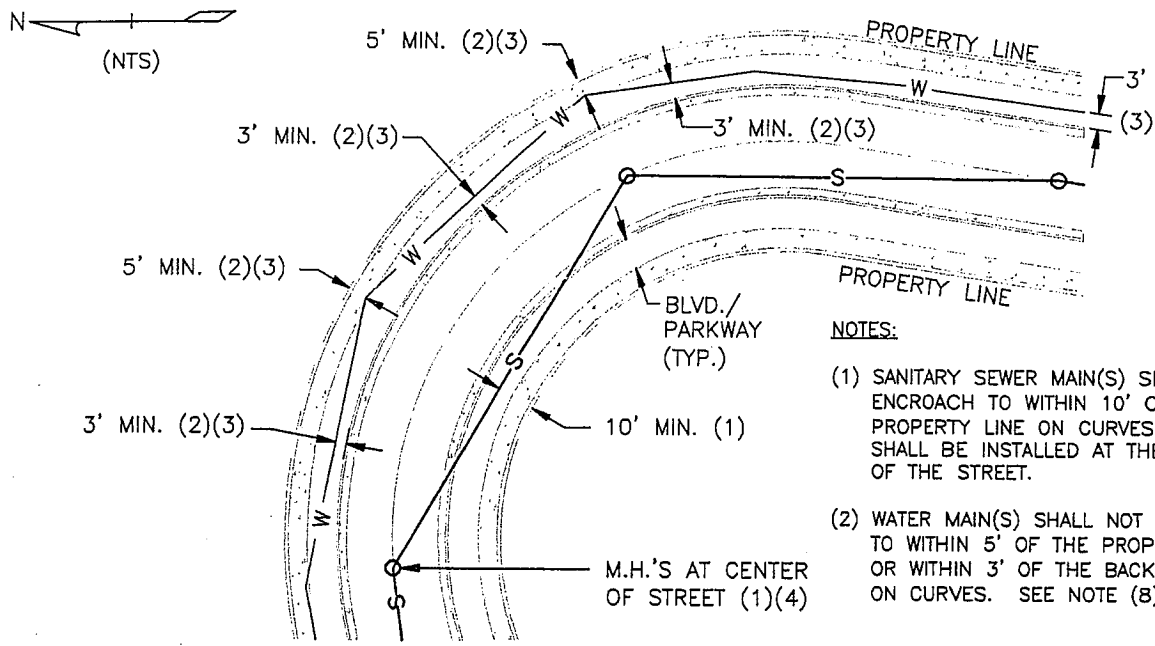

NOTES:

(1) SANITARY SEWER MAIN(S) SHALL NOT ENCROACH TO WITHIN 10' OF THE PROPERTY LINE ON CURVES. M.H.'S SHALL BE INSTALLED AT THE CENTERLINE OF THE STREET.

(2) WATER MAIN(S) SHALL NOT ENCROACH TO WITHIN 5' OF THE PROPERTY LINE OR WITHIN 3' OF THE BACK OF CURB ON CURVES. SEE NOTE (8) BELOW.

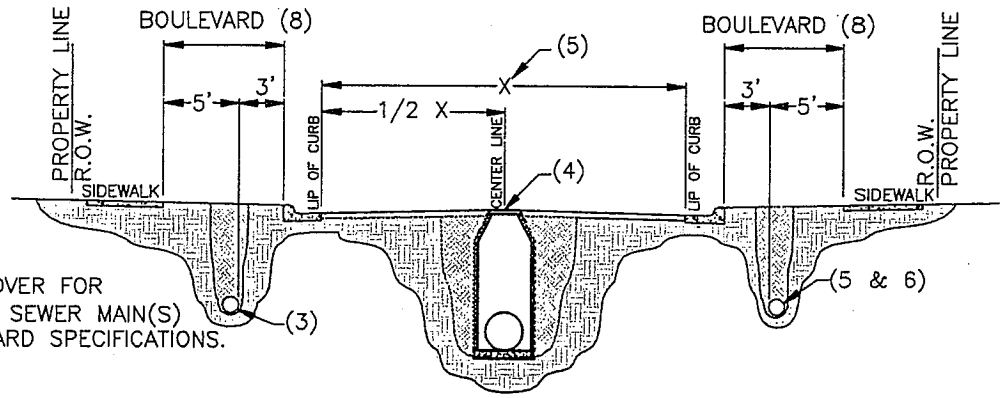

MINIMUM COVER FOR WATER AND SEWER MAIN(S) PER STANDARD SPECIFICATIONS.

NOTES:

(3) STANDARD LOCATION FOR WATER MAINS SHALL BE THE NORTH OR EAST BOULEVARD WITHIN THE PUBLIC R.O.W.

(4) STANDARD LOCATION FOR SANITARY SEWER MAIN(S) SHALL BE THE CENTERLINE (CL) OF THE STREET SECTION WITHIN THE PUBLIC R.O.W. ALL MANHOLES SHALL BE INSTALLED AT THE CENTERLINE (CL).

(5) IF "X" IS GREATER THAN 42' THEN A SECOND PARALLEL WATER MAIN SHALL BE CONSTRUCTED IN THE OPPOSITE BOULEVARD AREA WITHIN THE PUBLIC R.O.W.

(6) A SECOND PARALLEL WATER MAIN SHALL BE CONSTRUCTED IN THE OPPOSITE BOULEVARD AREA FOR ALL STREETS DESIGNATED AS AN ARTERIAL OR FUTURE ARTERIAL REGARDLESS OF THE STREET WIDTH.

(7) CHANGES IN DIRECTION FOR SANITARY SEWERS SHALL BE ACCOMPLISHED AT MANHOLES (THE PIPE SHALL BE STRAIGHT AND AT A CONSTANT SLOPE).

(8) FOR BOULEVARDS LESS THAN 8 FEET IN WIDTH THE 5 FEET FROM SIDEWALK REQUIREMENT MAY BE REDUCED. MAINTAIN MINIMUM 3 FEET FROM BACK OF CURB.

ALL NOTES APPLY TO BOTH FIGURES ON PAGE.

FIGURE 3–2

SANITARY SEWER MAIN(S) ALLOWING FOR A SINGLE MANHOLE TO BE LOCATED WITHIN A PERMANENT SANITARY SEWER EASEMENT

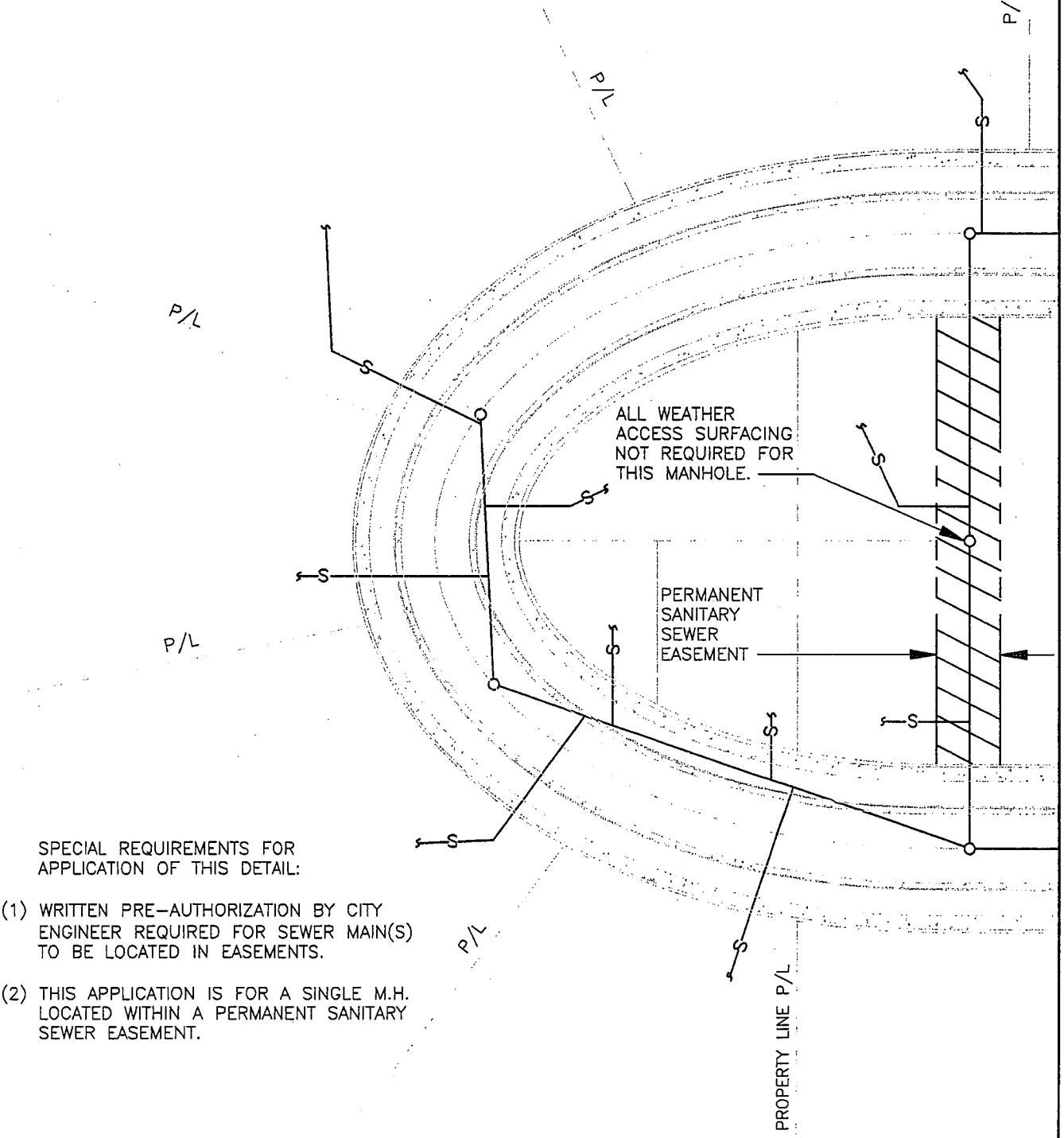

SPECIAL REQUIREMENTS FOR APPLICATION OF THIS DETAIL:

(1) WRITTEN PRE–AUTHORIZATION BY CITY ENGINEER REQUIRED FOR SEWER MAIN(S) TO BE LOCATED IN EASEMENTS.

(2) THIS APPLICATION IS FOR A SINGLE M.H. LOCATED WITHIN A PERMANENT SANITARY SEWER EASEMENT.

FIGURE 3–3

PERMANENT UTILITY EASEMENT TURN AROUND CRITERIA

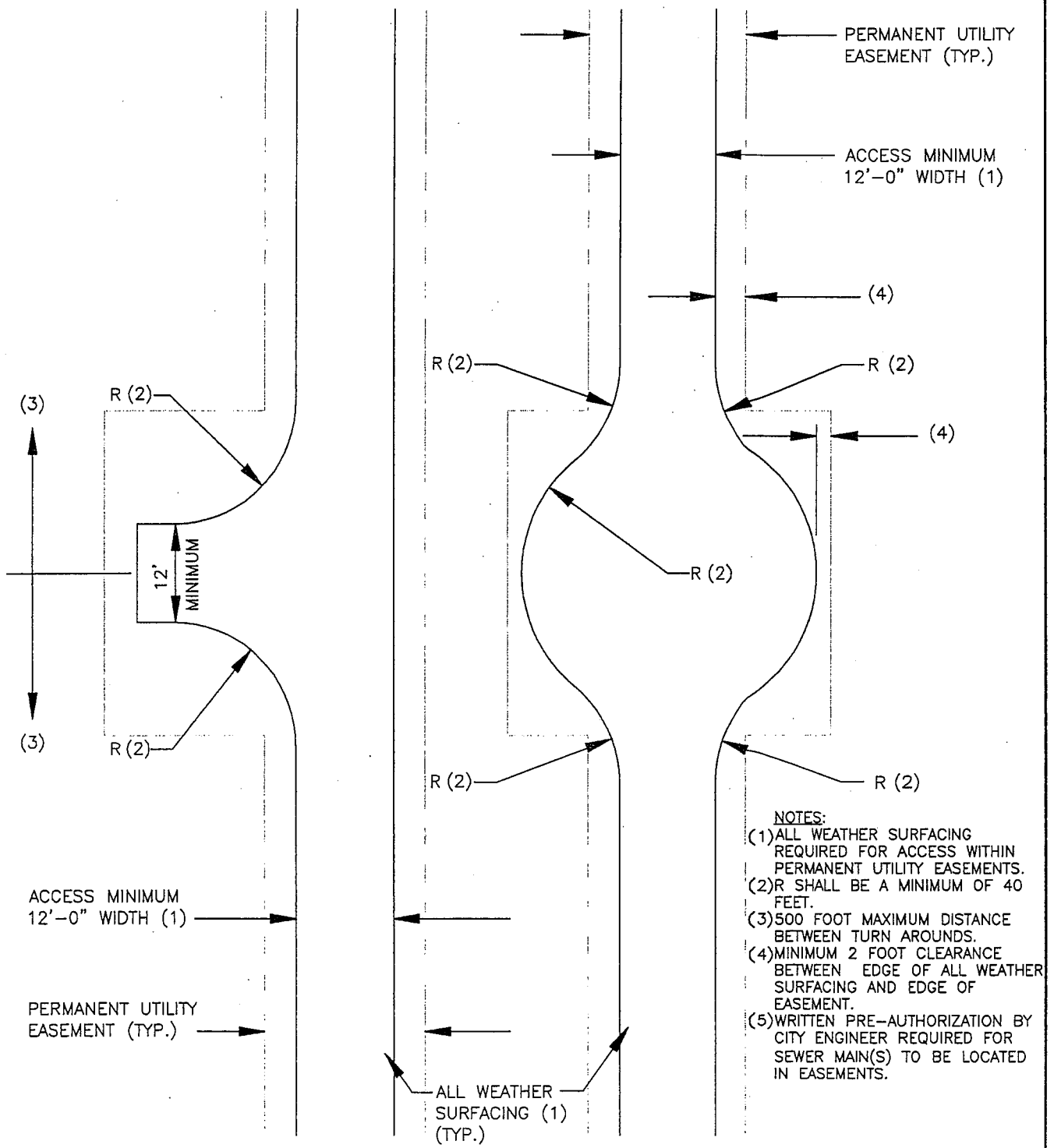

NOTES:
(1) ALL WEATHER SURFACING REQUIRED FOR ACCESS WITHIN PERMANENT UTILITY EASEMENTS.
(2) R SHALL BE A MINIMUM OF 40 FEET.
(3) 500 FOOT MAXIMUM DISTANCE BETWEEN TURN AROUNDS.
(4) MINIMUM 2 FOOT CLEARANCE BETWEEN EDGE OF ALL WEATHER SURFACING AND EDGE OF EASEMENT.
(5) WRITTEN PRE–AUTHORIZATION BY CITY ENGINEER REQUIRED FOR SEWER MAIN(S) TO BE LOCATED IN EASEMENTS.

FIGURE 3–4

EXCEPTION FOR THE EXTENSION OF SANITARY SEWER MAINS ACROSS THE FULL FRONTAGE OF PARCELS TO BE PROVIDED SEWER SERVICE

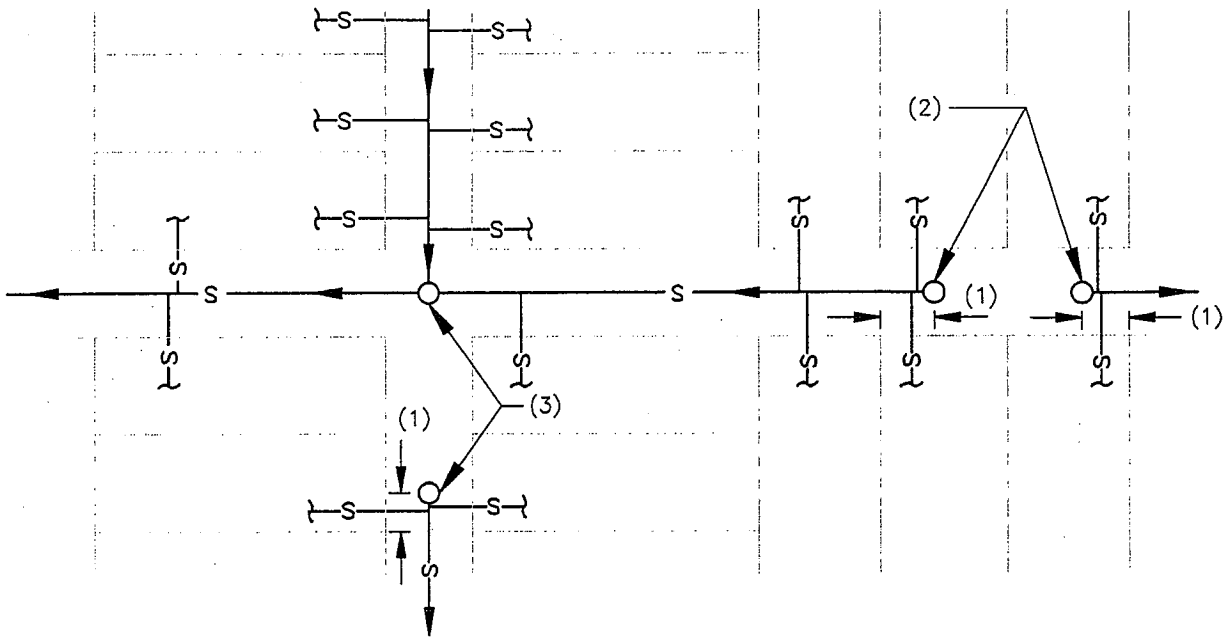

PLAN VIEW

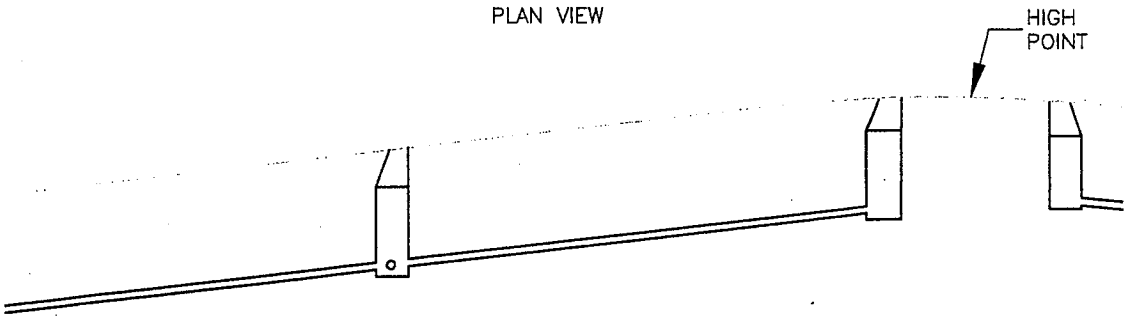

PROFILE VIEW

NOTES:

(1) SEWER TO BE EXTENDED A MINIMUM OF 15' FROM CENTER OF MANHOLE PAST DOWNSTREAM PROPERTY LINE PROJECTION BUT MAY BE EXTENDED MORE TO FACILITATE SERVICE LINE REQUIREMENTS.

(2) SEWER MAIN DOES NOT HAVE TO FRONT 100% OF PARCELS AT HIGH POINTS PROVIDED THAT ALL PARCELS HAVE ABILITY TO CONNECT TO A SEWER MAIN THAT FRONTS A MINIMUM OF 15' OF THE PARCEL.

(3) SEWER MAIN DOES NOT HAVE TO FRONT BOTH FRONTAGES OF A CORNER PARCEL PROVIDED ALL PARCELS HAVE A SEWER FRONTING ONE SIDE.

FIGURE 3-5

TYPICAL WATER AND SANITARY SEWER SERVICE LAYOUT

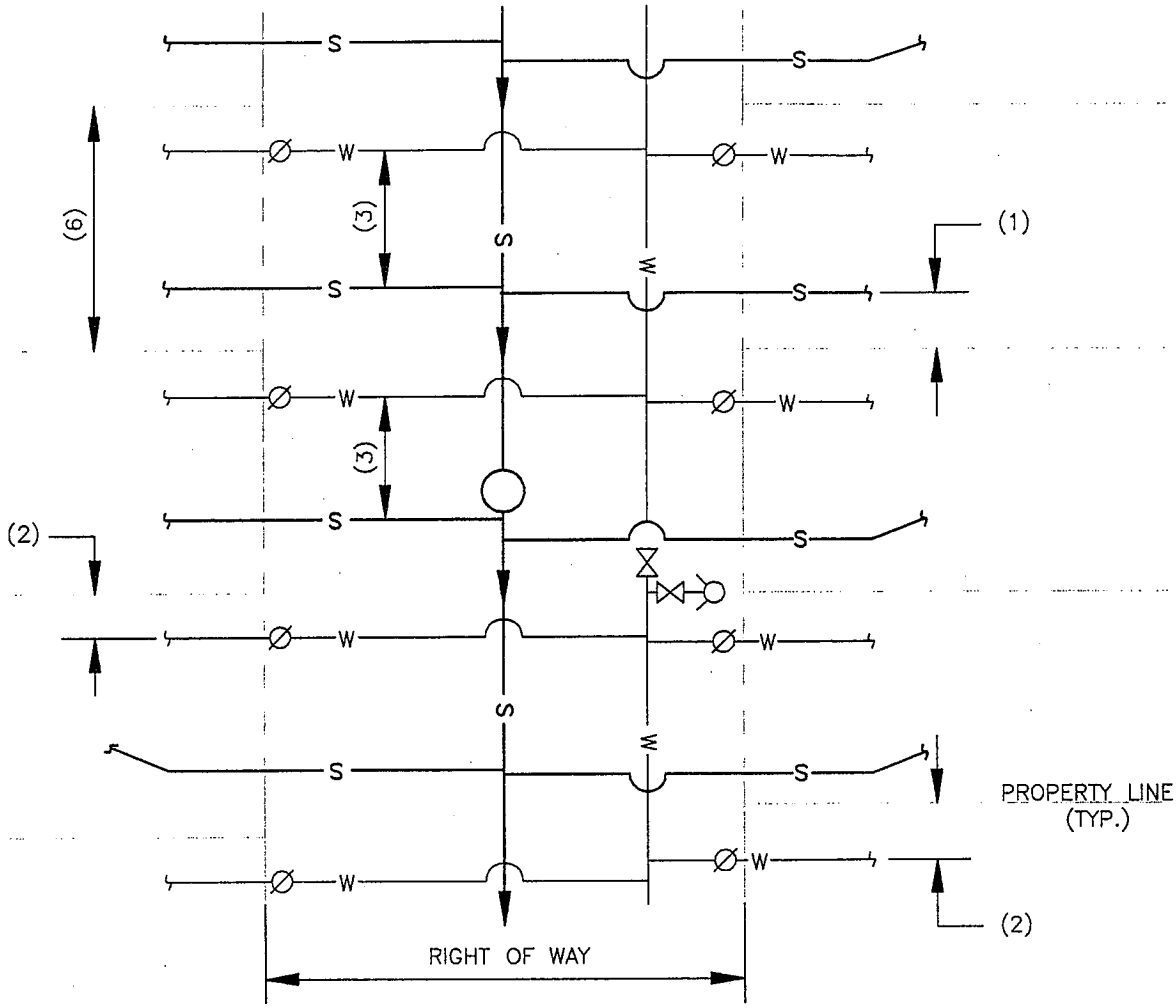

NOTES:

(1) SANITARY SEWER SERVICE SHALL BE INSTALLED ON THE DOWN GRADIENT SIDE OF THE PARCEL BEING SERVED. THE SERVICE SHALL BE AT LEAST 10' FROM THE SIDE LOT LINE AND SHALL BE EXTENDED PERPENDICULAR FROM THE MAIN TO THE PARCEL.

(2) WATER SERVICE SHALL BE INSTALLED ON THE UPGRADIENT SIDE OF THE PARCEL BEING SERVED. THE SERVICE SHALL BE AT LEAST 10' FROM THE SIDE LOT LINE AND SHALL BE EXTENDED PERPENDICULAR FROM THE MAIN TO THE PARCEL.

(3) WATER SERVICE LINES SHALL HAVE A MINIMUM HORIZONTAL SEPARATION FROM SEWER SERVICES OF 10'.

(4) SANITARY SEWER SERVICES MAY NOT BE INSTALLED WITHIN THE SAME TRENCH. SEWER SERVICES SHALL HAVE A MINIMUM OF 5' HORIZONTAL SEPARATION FROM EACH OTHER.

(5) WATER SERVICES MAY NOT BE INSTALLED WITHIN THE SAME TRENCH. WATER SERVICES SHALL HAVE A MINIMUM OF 5' HORIZONTAL SEPARATION FROM EACH OTHER.

(6) FOR LOTS WITH A FRONTAGE LESS THAN 30', THEN THE DISTANCE FROM THIS SIDE LOT LINE TO THE SERVICE (1) (2) MAY BE REDUCED FROM 10' TO 6'.

FIGURE 3–6

TYPICAL WATER DISTRIBUTION AND SANITARY SEWER COLLECTION SYSTEM LAYOUT AND SERVICE LINE LOCATIONS FOR CUL–DE–SACS

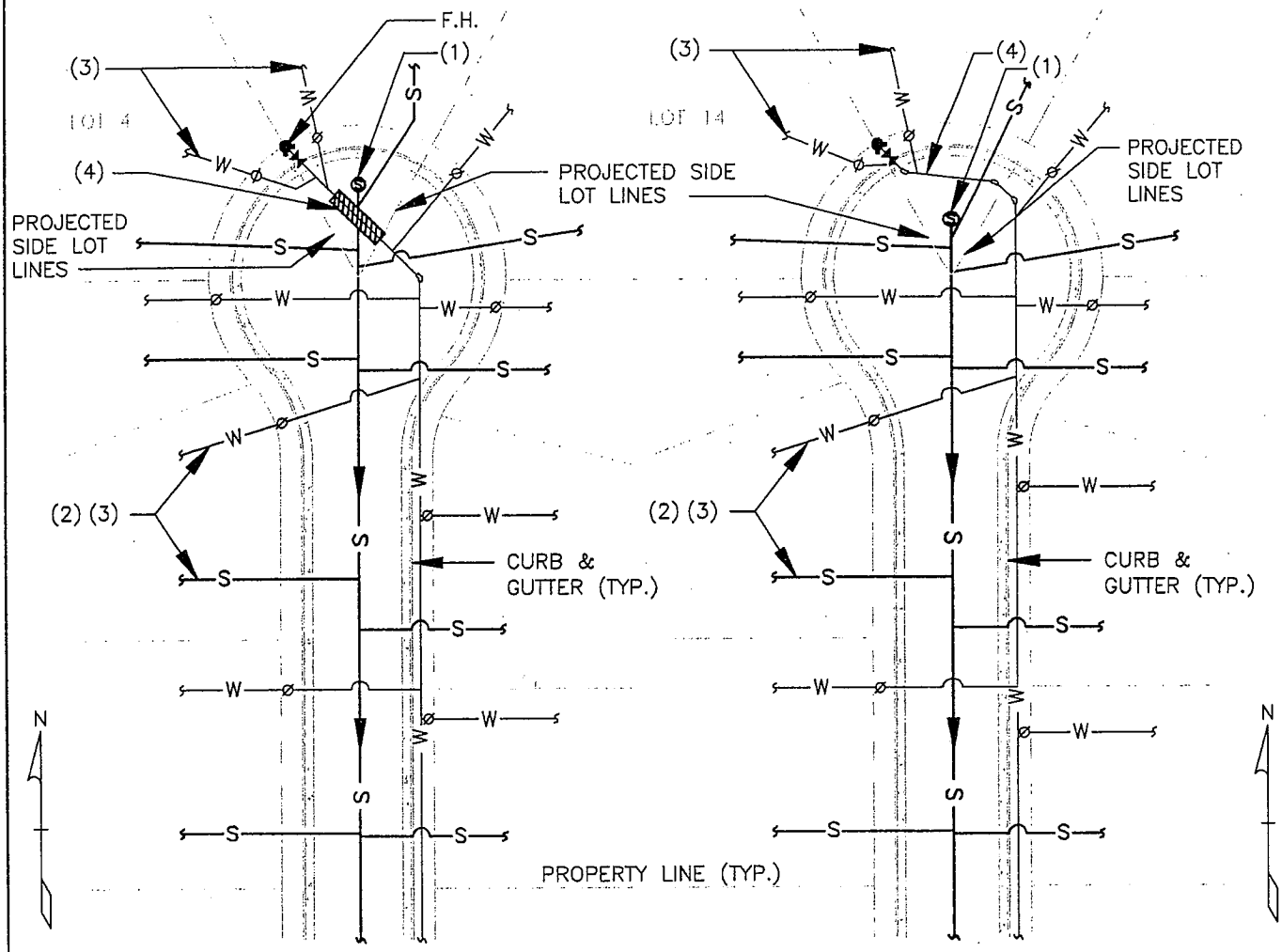

(NTS) (NTS)

NOTES:

(1) MANHOLE SHALL BE INSTALLED AT LEAST 10' PAST THE INTERSECTION OF THE PROJECTED SIDE LOT LINES BUT NO CLOSER THAN 6' TO THE GUTTER LIP.

(2) SERVICES TO BE INSTALLED PER FIGURE 3–5.

(3) SERVICES (EXCEPT FOR TWO WATER SERVICES NEXT TO THE FIRE HYDRANTS LOTS 4 AND 14) SHALL BE TAPPED TO THE MAIN THAT FRONTS THE PARCEL AND SHALL BE TAPPED WITHIN THE PROJECTION OF THE SIDE LOT LINES.

(4) THE WATER MAIN SHALL CROSS THE SEWER MAIN OR SHALL CROSS IN FRONT OF THE M.H. IN A MANNER SO THAT ALL PARCELS HAVE A SEWER MAIN AND WATER MAIN FRONTING THEM. THE ONLY EXCEPTION WILL BE WATER SERVICE FOR LOTS 4 AND 14.

FIGURE 3–7A

TYPICAL WATER SERVICE LINE LAYOUTS

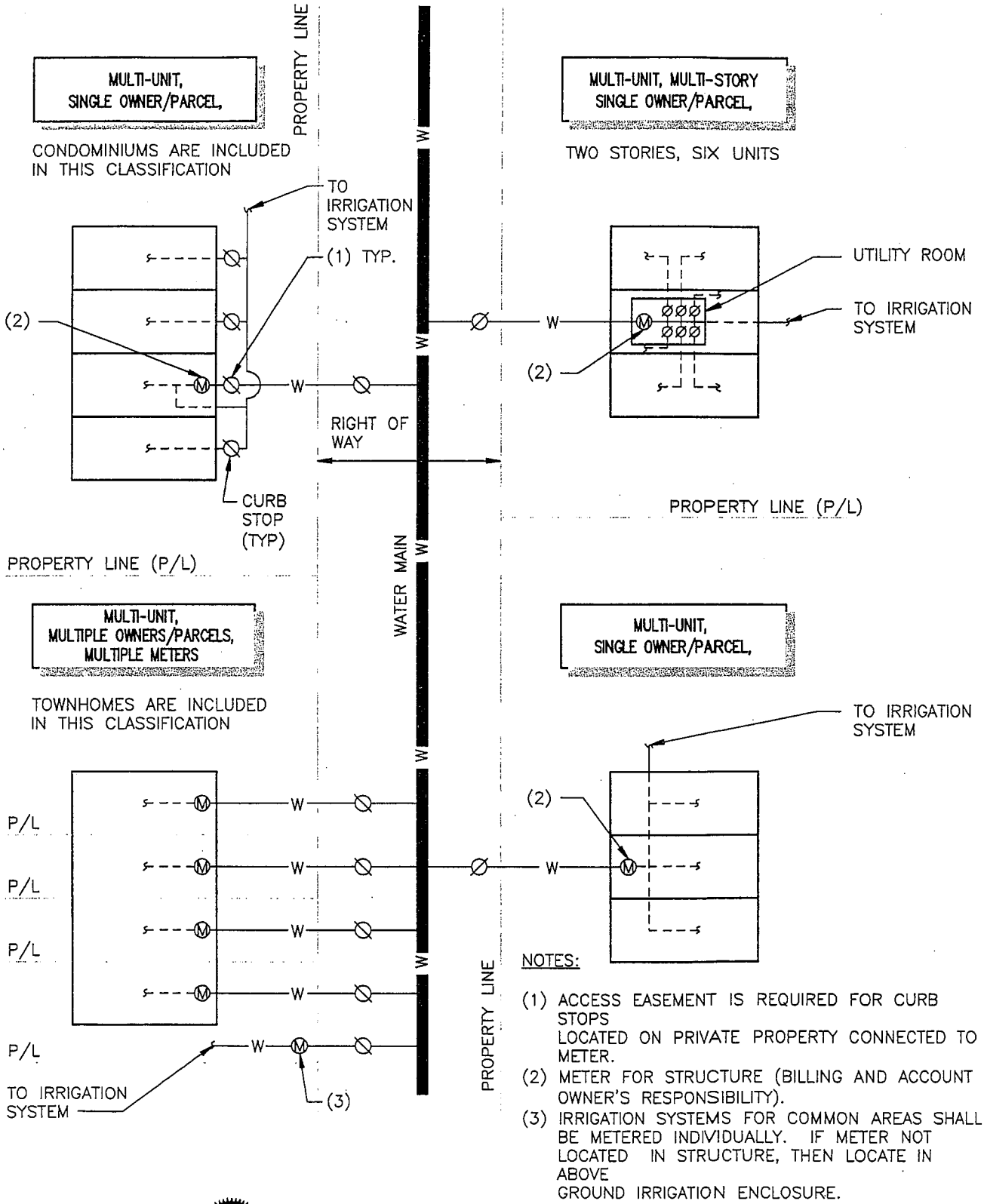

NOTES:

(1) ACCESS EASEMENT IS REQUIRED FOR CURB STOPS LOCATED ON PRIVATE PROPERTY CONNECTED TO METER.

(2) METER FOR STRUCTURE (BILLING AND ACCOUNT OWNER'S RESPONSIBILITY).

(3) IRRIGATION SYSTEMS FOR COMMON AREAS SHALL BE METERED INDIVIDUALLY. IF METER NOT LOCATED IN STRUCTURE, THEN LOCATE IN ABOVE GROUND IRRIGATION ENCLOSURE.

FIGURE 3-7B

TYPICAL WATER SERVICE LINE LAYOUTS

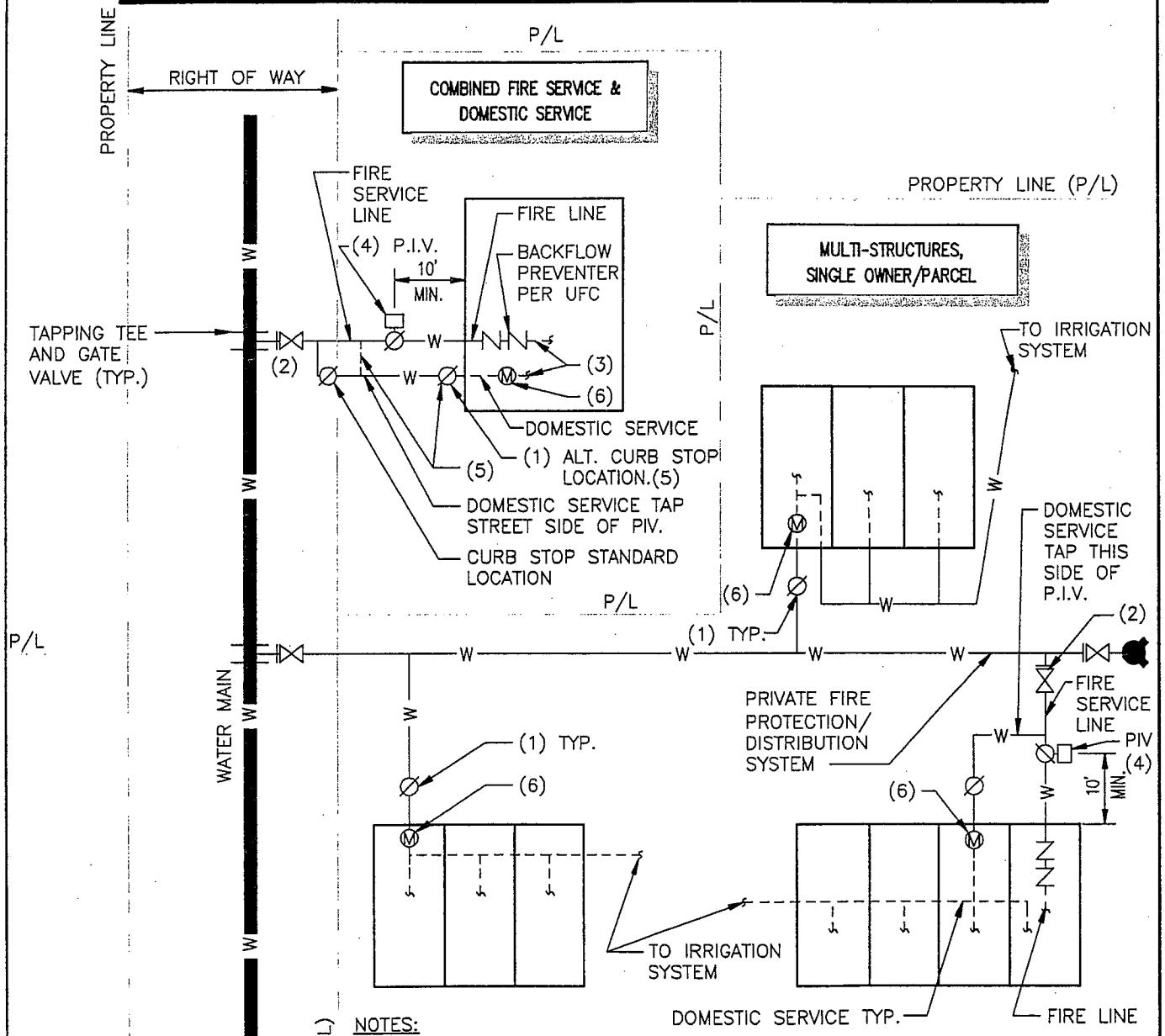

NOTES:

(1) ACCESS EASEMENT IS REQUIRED FOR CURB STOPS LOCATED ON PRIVATE PROPERTY CONNECTED TO METER.

(2) IF DOMESTIC SERVICE TAP IS NOT MADE TO FIRE SERVICE LINE, THEN GATE VALVE TO BE INSTALLED WITH A SHORT VALVE BOX AND SHALL TO BE BURIED 2 TO 3 FEET BELOW THE SURFACE.

(3) FOR HOSE CABINET-TYPE FIRE PROTECTION SYSTEMS, SEPARATE EXTERIOR DOMESTIC SERVICE & CURB STOP AS SHOWN ABOVE ARE NOT REQUIRED.

(4) A WALL MOUNTED INDICATOR VALVE REQUIRES WRITTEN PRE APPROVAL BY THE FIRE CHIEF.

(5) IF DOMESTIC SERVICE IS LONGER THAN 30' FROM PROPERTY LINE TO BUILDING,
THEN THE DOMESTIC SERVICE MAY BE TAPPED ON THE STREET SIDE OF THE PIV. THE CURB STOP COULD THEN BE LOCATED ON PRIVATE PROPERTY AND WOULD REQUIRE AN ACCESS EASEMENT.

(6) METER FOR STRUCTURE (BILLING AND ACCOUNT OWNER'S RESPONSIBILITY).

FIGURE 3–8

TYPICAL SANITARY SEWER SERVICE LINE LAYOUTS

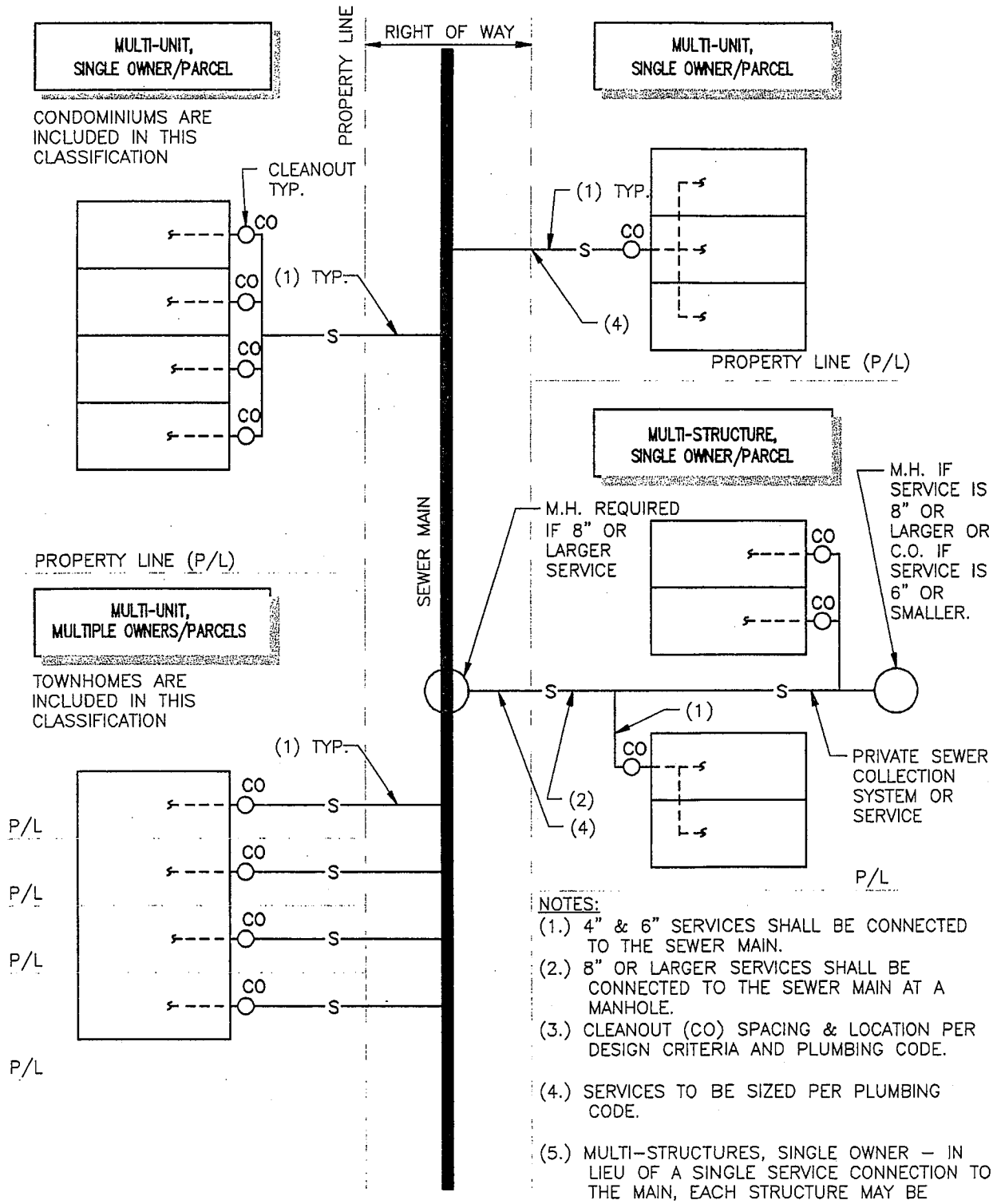

NOTES:

(1.) 4" & 6" SERVICES SHALL BE CONNECTED TO THE SEWER MAIN.

(2.) 8" OR LARGER SERVICES SHALL BE CONNECTED TO THE SEWER MAIN AT A MANHOLE.

(3.) CLEANOUT (CO) SPACING & LOCATION PER DESIGN CRITERIA AND PLUMBING CODE.

(4.) SERVICES TO BE SIZED PER PLUMBING CODE.

(5.) MULTI–STRUCTURES, SINGLE OWNER – IN LIEU OF A SINGLE SERVICE CONNECTION TO THE MAIN, EACH STRUCTURE MAY BE CONNECTED TO THE MAIN.

FIGURE 3–9

WATER MAIN VALVE CLUSTERS AND FIRE HYDRANT LAYOUTS FOR INTERSECTIONS

FIRE HYDRANT NOTES:

(1) FIRE HYDRANT(S) ARE TO BE LOCATED WITHIN THE INTER–SECTION VALVE CLUSTER.
(2) FIRE HYDRANT(S) ARE TO BE LOCATED AT THE HIGH POINT OF THE VALVE CLUSTER. (THE INTERSECTION QUADRANT THAT IS HIGHEST).
(3) WHEN POSSIBLE (WITHOUT VIOLATING NOTE 2) THE FIRE HYDRANT SHOULD BE TAPPED TO THE LARGEST DIAMETER WATER MAIN.
(4) VALVES TO BE LOCATED IN TURFED AREAS.

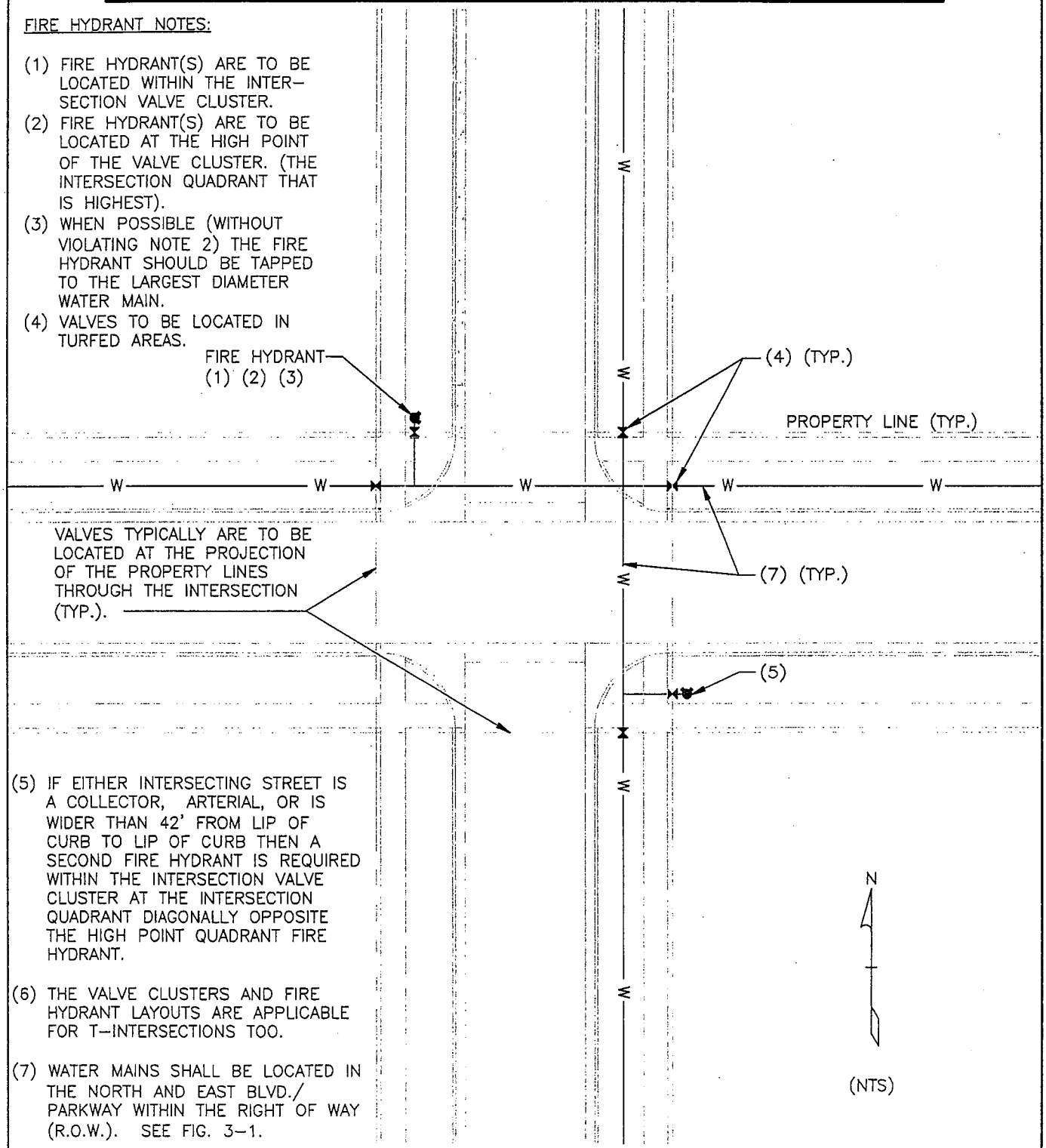

(5) IF EITHER INTERSECTING STREET IS A COLLECTOR, ARTERIAL, OR IS WIDER THAN 42' FROM LIP OF CURB TO LIP OF CURB THEN A SECOND FIRE HYDRANT IS REQUIRED WITHIN THE INTERSECTION VALVE CLUSTER AT THE INTERSECTION QUADRANT DIAGONALLY OPPOSITE THE HIGH POINT QUADRANT FIRE HYDRANT.

(6) THE VALVE CLUSTERS AND FIRE HYDRANT LAYOUTS ARE APPLICABLE FOR T–INTERSECTIONS TOO.

(7) WATER MAINS SHALL BE LOCATED IN THE NORTH AND EAST BLVD./ PARKWAY WITHIN THE RIGHT OF WAY (R.O.W.). SEE FIG. 3–1.

FIGURE 3–10

WATER MAIN VALVE AND FIRE HYDRANT LOCATIONS OUTSIDE OF STREET INTERSECTIONS

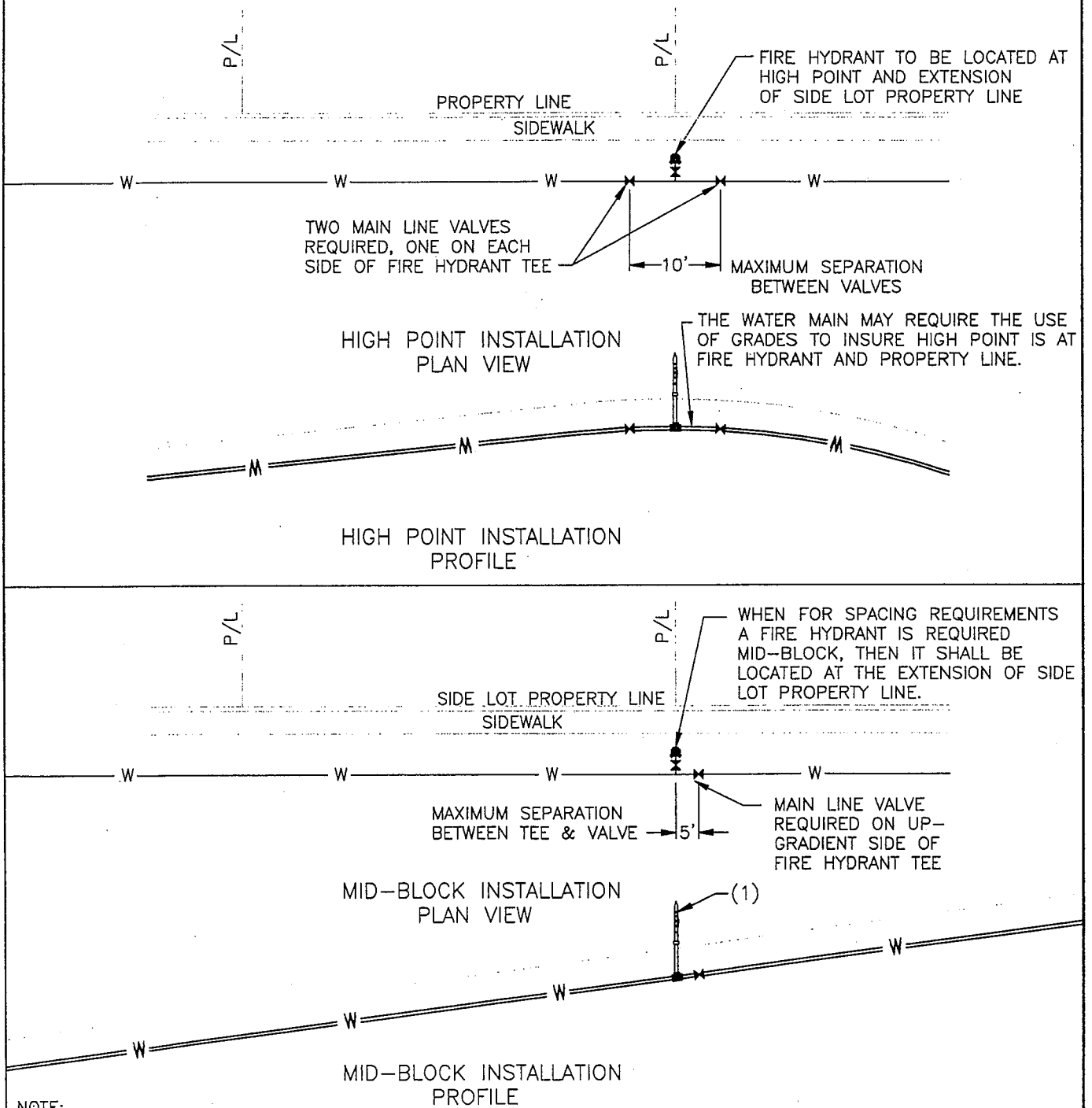

NOTE:

(1) A FIRE HYDRANT SHALL BE INSTALLED AT ALL PRESSURE ZONE SEPARATION BOUNDARIES. TWO MAIN LINE VALVES SHALL BE INSTALLED AT ALL PRESSURE ZONE SEPARATIONS, ONE ON EACH SIDE OF THE FIRE HYDRANT TEE.

FIGURE 3–11

ALIGNMENT & PROFILE CHANGES FOR 24" AND LARGER DIAMETER SEWER MAINS

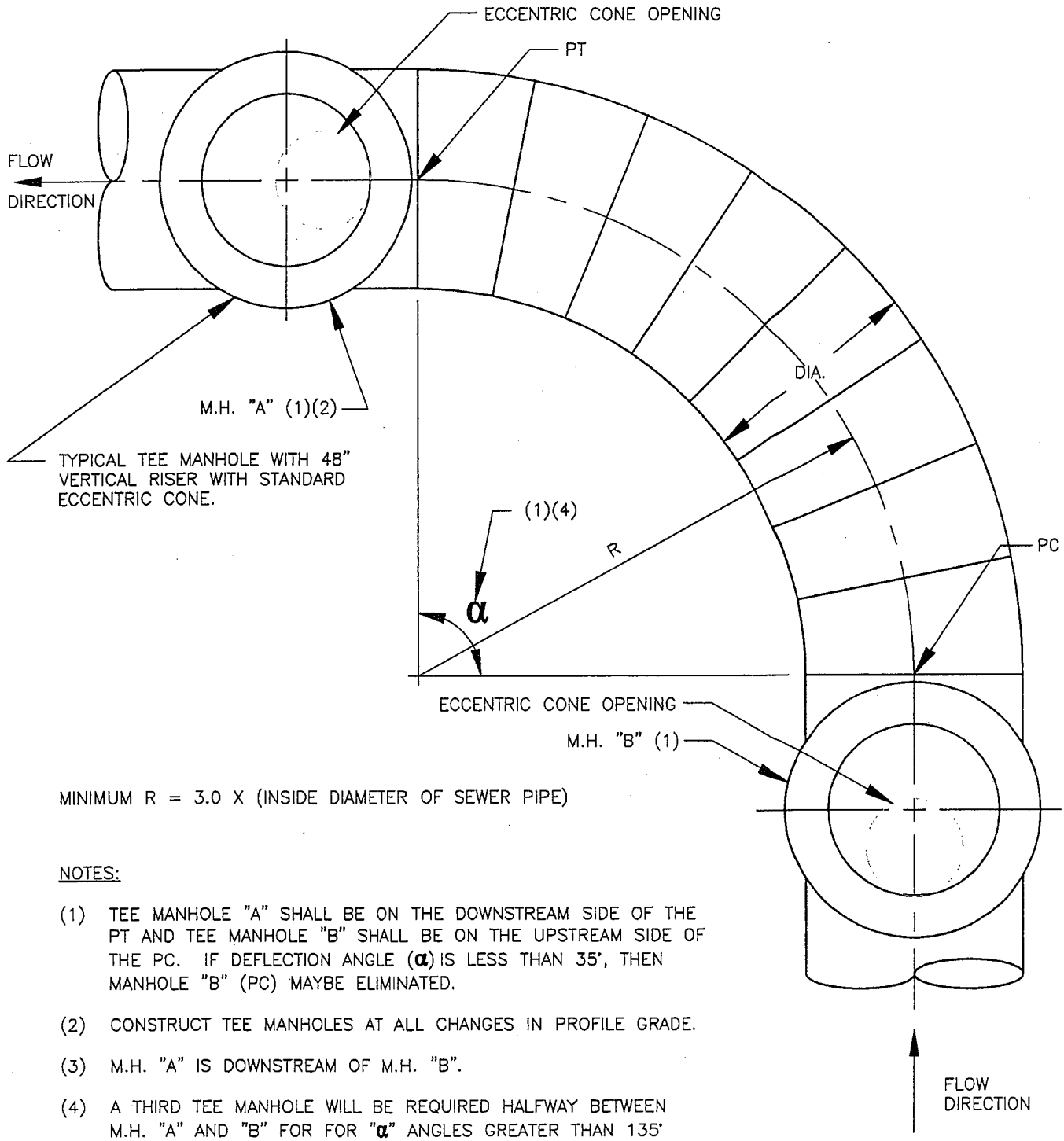

MINIMUM R = 3.0 X (INSIDE DIAMETER OF SEWER PIPE)

NOTES:

(1) TEE MANHOLE "A" SHALL BE ON THE DOWNSTREAM SIDE OF THE PT AND TEE MANHOLE "B" SHALL BE ON THE UPSTREAM SIDE OF THE PC. IF DEFLECTION ANGLE (α) IS LESS THAN 35°, THEN MANHOLE "B" (PC) MAYBE ELIMINATED.

(2) CONSTRUCT TEE MANHOLES AT ALL CHANGES IN PROFILE GRADE.

(3) M.H. "A" IS DOWNSTREAM OF M.H. "B".

(4) A THIRD TEE MANHOLE WILL BE REQUIRED HALFWAY BETWEEN M.H. "A" AND "B" FOR FOR "α" ANGLES GREATER THAN 135° DEGREES.

FIGURE 3–12

MINIMUM DEFLECTION ANGLES FOR GRAVITY SANITARY SEWER MAINS AT MANHOLES

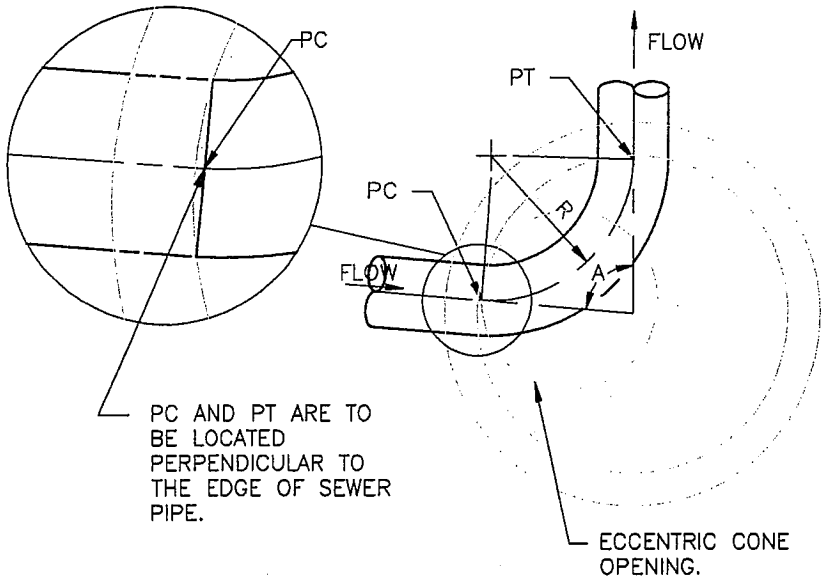

NOTES:

(1) "A" ANGLES LESS THAN 90° REQUIRE THE DESIGN ENGINEER TO SUBMIT A WRITTEN REQUEST AND JUSTIFICATION FOR A DESIGN EXCEPTION, AND OBTAIN CITY APPROVAL FOR THE EXCEPTION. IN NO CASE SHALL THE "A" ANGLE BE LESS THAN 75°.

(2) THESE CRITERIA APPLY FOR SEWER MAINS LESS THAN 24 INCHES IN DIAMETER.

(3) A MINIMUM RADIUS (R) OF 2.5 TIMES THE INSIDE DIAMETER (I.D.) OF BRANCH MAIN IS REQUIRED FOR ALL SWEEPS. IF 2.5 TIMES THE I.D. OF THE BRANCH CAN NOT BE MET, THEN A LARGER DIAMETER MANHOLE SHALL BE SPECIFIED.

ANGLES LESS THAN 90°

OUTLET PIPE DIA.	INLET PIPE DIA.	MIN. ANGLE "A" IN DEGREES				
INCHES	INCHES	48" DIA.	60" DIA.	72" DIA.	84" DIA.	96" DIA.
8	8	80	75	75	75	75
10	8	81	75	75	75	75
10	10	94	80	75	75	75
12	8	81	75	75	75	75
12	10	94	81	75	75	75
12	12	104	91	80	75	75
15	8	83	75	75	75	75
15	10	95	81	75	75	75
15	12	106	92	81	75	75
15	15	117	104	94	84	77
18	8	FOR OUTLET PIPES 18" AND LARGER, THE DESIGN ENGINEER SHALL CALCULATE THE MANHOLE DIAMETER PER NOTE 3 ABOVE.				
18	10					
18	12					
18	15					
18	18					
21	8					
21	10					
21	12					
21	15					
21	18					
21	21					

CITY OF RAPID CITY

INFRASTRUCTURE DESIGN CRITERIA

SECTION FOUR

STORMWATER CRITERIA

Section Four – Stormwater

4.1 General Criteria

4.1.1 Multi-purpose Use

Multi-purpose use of all drainage facilities shall be considered in the design of those facilities. Small local parks, greenbelts, nature trails, bike trails and similar facilities will be incorporated with major drainage facilities whenever possible, as long as the hydraulic capacity of the facility is not compromised by these alternate uses.

4.1.2 Stormwater Transfer

The design of stormwater drainage systems shall not result in the inter-basin transfer of drainage, unless no reasonable alternative exists and there is no legal restraint preventing such transfer.

4.1.3 Access to Facilities

Easements, right-of-ways or other legal access shall be provided to all stormwater drainage facilities for inspection, maintenance, or repair.

4.1.4 Operation and Maintenance

Operation and maintenance of stormwater drainage facilities shall be required to insure that these facilities will perform as designed. Prior to the construction of any stormwater management facility, the responsibility for the operation and maintenance of that facility shall be determined.

4.1.5 Planning Requirements

All development shall conform to an approved Drainage Basin Design Plan. If no plan exists for the area of the proposed development, the City may: (1) waive this requirement, (2) require the development to provide the necessary data; or, (3) declare a "study area" per City ordinance until a Drainage Basin Design Plan is completed. Interim plans may be accepted, providing they conform to the overall objectives of the Manual.

4.1.6 Drainage Easements

Drainage easements shall be established for the 100 year runoff when the drainage way conveys the runoff from two or more lots. When drainage easements incorporate easements for other utilities the easement shall be increased as necessary to accommodate utilities such that these utilities are not within the main drainage channel. Drainage easements can be incorporated into existing right-of-way as long as the drainage way flow path remains clear of surface obstructions.

4.1.7 Stormwater Quality

For stormwater quality requirements refer to the City of Rapid City Stormwater Quality Manual.

4.1.8 Reporting Requirements

Stormwater reports submitted for acceptance by the City of Rapid City shall contain at a minimum design input parameters, output, assumptions and calculations in addition to other items required by Section 1 of this manual.

4.1.9 Bridge Hydraulic Design

Bridge hydraulic design is beyond the scope of this manual.

4.2 Storm Runoff

4.2.1 General Statement

1) The Rational Method may be used for the determination of runoff from areas of 160 acres or less.

2) For drainage basins with an existing Drainage Basin Plan the designer may:

   a) Use the stormwater runoff volumes contained in those plans,

   b) Use the Colorado Unit Hydrograph Procedure (CUHP) for modeling of specific elements or properties with the basin.

   c) Use HEC-HMS for determination of runoff volumes within the basin and for modeling of elements or properties within the basin.

3) For drainage basins that do not have an existing Drainage Basin Plan, the designer must:

   a) Use HEC-HMS for determination of runoff volumes within the basin and for modeling of elements or properties within the basin.

4) HEC-HMS must be used for development of Drainage Basin Plans for drainage basins that do not have an adopted Drainage Basin Plan at the time of implementation of the design criteria manual.

5) Any submittal requiring FEMA approval must follow FEMA guidelines.

6) Modeling must be conducted by a qualified and experienced hydrologist or engineer.

4.2.2 Rational Method

1) The Rational Method is an empirical runoff formula which has gained wide acceptance because of its simple, intuitive treatment of storm runoff. This method relates peak runoff to rainfall intensity, surface area, and surface characteristics by the formula:

$$Q = CiA \qquad \text{(Eq. 4-2-1)}$$

where:

Q = peak runoff rate, in cubic feet per second

C = runoff coefficient representing a ratio of peak runoff rate to average rainfall intensity for a duration equal to the time of concentration

i = average rainfall intensity, in inches per hour A = drainage area, in acres

2) The Rational Method is based on the following assumptions:
   a) The peak rate of runoff at any point is a direct function of the average uniform rainfall intensity during the time of concentration to that point.
   b) The frequency of the peak discharge is the same as the frequency of the average rainfall intensity.
   c) The time of concentration is the time required for the runoff to become established and flow from the most hydraulically remote part of the drainage area to the point under design. This assumption applies to the most remote in time, not necessarily in distance.

3) Practice generally limits use of the Rational Method to some maximum area. For larger areas, storage and subsurface drainage flow cause an attenuation of the runoff hydrograph so that the rates of flow tend to be overestimated by the Rational Method. In addition, the assumption of uniform rainfall distribution and intensity becomes less appropriate as drainage area increases. Because of the trend for overestimation of flows and the additional cost in drainage facilities associated with this overestimation, the application of a more sophisticated runoff computation technique is usually warranted on larger drainage areas.The designer must obtain permission from the City before applying the Rational Method to areas larger than 160 acres.

4.2.3 Runoff Coefficient

1) The runoff coefficient, C, is a variable of the Rational Method which is least susceptible to a precise determination and provides the designer with a degree of latitude to exercise independent judgment. The following discussion is intended to provide a guide to promote the uniform application of runoff coefficients.

2) The runoff coefficient accounts for abstractions for losses between rainfall and runoff which may vary with time for a given drainage area. These losses are caused by interception by vegetation, infiltration into permeable soils, retention in surface depressions, and evaporation and transpiration. In determining this coefficient, differing climatological and seasonal conditions, antecedent moisture conditions, and the intensity and frequency of the design storm should be considered.

3) Table 4-1 presents recommended C values that vary with recurrence frequency. It is required to develop a composite runoff coefficient based in part on the percentage of different types of surfaces in the drainage area. This procedure can be applied to typical sample areas as a guide to the selection of the coefficient for the entire area.

TABLE 4-1

Recommended Runoff Coefficients and Percent Impervious					
Land Use	**Impervious Percentage**	**Runoff C 2-yr**	**Runoff C 5-yr**	**Runoff C 10-yr**	**Runoff C 100-yr**
Business/Commercial	95.00	0.87	0.87	0.88	0.89
Business/Neighborhood	70.00	0.60	0.65	0.70	0.80
Single Family Residential	45.00	0.40	0.45	0.50	0.60
Multi-Unit (detached)	50.00	0.45	0.50	0.60	0.70
Multi-Unit (attached)	70.00	0.60	0.65	0.70	0.80
½ Acre lot or larger	45.00	0.30	0.35	0.40	0.60
Apartments	70.00	0.65	0.70	0.70	0.80
Light Industrial	80.00	0.71	0.72	0.76	0.82
Heavy Industrial	90.00	0.80	0.80	0.85	0.90
Parks/Cemeteries	7.00	0.10	0.10	0.35	0.60
Playground	13.00	0.45	0.25	0.35	0.65
Schools	50.00	0.45	0.50	0.60	0.70
Railroad Yard Area	20.00	0.40	0.45	0.50	0.60
Paved Streets	100.00	0.87	0.88	0.90	0.93
Gravel Streets	40.00	0.15	0.25	0.35	0.65
Drive & Walks	96.00	0.87	0.87	0.88	0.89
Roofs	90.00	.80	0.85	0.90	0.90
Lawns, Sandy Soil	2.00	0.00	0.01	0.05	0.20
Lawns, Clay Soil	2.00	0.05	0.10	0.20	0.40

A composite runoff coefficient is calculated using the relationship:

$$C = \frac{\sum_{i=1}^{n} C_i A_i}{A_t} \qquad \text{(Eq. 4-2-2)}$$

where:

Ci = individual runoff coefficient corresponding to surface type Ci

Ai = area of surface type corresponding to Ci

At = total drainage area for which composite runoff coefficient is applicable

n = total number of surface types in drainage areas

C = the composite runoff coefficient

4.2.4 Rainfall Intensity

1) Rainfall intensity, i, is the average rate of rainfall, in inches per hour. Intensity is selected on the basis of design frequency of exceedence, a statistical parameter established by design criteria, and rainfall duration. For the rational method, the critical rainfall intensity is the rainfall having duration equal to the time of concentration of the drainage basin.

2) Rainfall intensity can be determined for the 2, 10, and 100-year return periods from Table 4-2.

4.2.5 Time of Concentration

1) One of the basic assumptions underlying the Rational Method is that runoff is a function of the average rainfall rate during the time required for water to flow from the most hydraulically remote point of the drainage basin to the point under consideration. Time of concentration is usually computed by determining the travel time through the watershed. Overland flow, storm sewer or road gutter flow, and channel flow are the three phases of direct flow commonly used in computing travel time.

2) For urban areas, the time of concentration consists of an inlet time or overland flow time (t_i) plus the travel time (t_t) in the storm sewer, paved gutter, roadside drainage ditch, or drainage channel. For non-urban areas, the time of concentration consists of an overland flow time (t_i) plus the time of travel (t_t) in a combined form, such as a small swale, channel, or drainage way. The travel portion (t_t) of the time of concentration can be estimated from the hydraulic properties of the storm sewer, gutter, swale, ditch, or drainage way. Inlet time, on the other hand, will vary with surface slope, depression storage, surface cover, antecedent rainfall, and infiltration capacity of the soil, as well as distance of surface flow. The time of concentration can be represented by Equation 4-2-3 for both urban and non-urban areas.

$t = t_1 + t_t$ (Eq. 4-2-3):

where:

t_c = time of concentration, in minutes

t= initial inlet or overland flow time in minutes

t_t = travel time in the ditch, channel, gutter, or storm sewer, in minutes

4.2.6 Time of Concentration in Non-Urbanized

1) Overland Flow:

The travel time for overland flow consists of the time it takes water to travel from the uppermost part of the watershed to a defined channel or inlet of the storm sewer system. Overland flow is significant in small watersheds because a high proportion of travel time is due to overland flow. The velocity of overland flow can vary greatly with the surface cover and tillage. If the slope and land use of the overland flow segment are known, the travel time can be calculated using the following equation.

$$t_i = 1.87(1.1 - C_5)L^{0.5}S^{-0.33} \quad \text{(Eq. 4-2-4)}$$

where:

t_1= initial or overland flow time, in minutes

C_5 = runoff coefficient for a 5-year frequency

L = length of overland flow

S = average slope of flow path, in percent

Should the calculations result in a t_c of less than 10-minutes, it is recommended that a minimum value of 10-minutes be used for non-urban watersheds.

2) Storm Sewer or Road Gutter Flow:

Travel time through the storm sewer or road gutter system to the main open channel is the sum of travel times in each individual component of the system between the uppermost inlet and the outlet. In most cases average velocities can be used without a significant loss of accuracy. During major storm events, the sewer system may be fully taxed and additional channel flow may occur, generally at a significantly lower velocity than the flow in the storm sewers. By using the average conduit size and the average slope (excluding any vertical drops in the system), the average velocity can be estimated using Manning's Formula.

Since the hydraulic radius of a pipe flowing half full is the same as when flowing full, the respective velocities are equal. Travel time may be based on the pipe flowing full or half full. The travel time through the storm sewers is computed by dividing the length of flow by the average velocity.

3) Channel Flow:

The travel time for flow in an open channel can be determined by using Manning's Formula to compute average velocities. Bank full velocities should be used to compute these averages.

4.2.7 Time of Concentration in Urbanized Basins

1) Overland flow in urbanized basins can occur from the back of the lot to the street, in parking lots, in greenbelt areas, or within park areas. The time of concentration at the first design point in an urbanized basin using this procedure should not exceed the time of concentration calculated using Equation 4-2-5.

$$t_c = \frac{L}{180} + 10 \qquad \text{(Eq. 4-2-5)}$$

where:

t_c = time of concentration at the first design point in an urban watershed, in minutes

L = watershed length, in feet

Normally, Equation 4-2-5 will result in a lesser time of concentration at the first design point and will govern in an urbanized watershed. For subsequent design points, the time of concentration is calculated by accumulating the travel times in downstream drainage way reaches. The minimum t_c recommended for urbanized area should not be less than 5 minutes and if calculations indicate a lesser value, use 5 minutes.

The inlet time can be estimated by calculating the various overland distances and flow velocities taken from the most remote point. A common mistake in urbanized areas is to assume travel velocities that are too slow. Another common error is to not check the runoff peak resulting from only a part of the basin. Sometimes a lower portion of the basin produces a larger peak than that computed for the whole basin. This error is most often encountered in long basins, or in basins where the upper portion contains grassy park land and the lower portion is developed urban land.

2) When studying a tract of land proposed for a subdivision, do not necessarily take the overland flow path perpendicular to the contours. The land will be graded and swales will often intercept the natural contour and conduct the water to the streets, thus decreasing the time of concentration.

4.3 Hydrologic Analysis Methodologies

4.3.1 There are several methodologies and modeling tools for development of rainfall runoff hydrographs. Many of the modeling tools use similar techniques but have differing user capabilities and some are public access and some are proprietary. The City of Rapid City

has chosen to use the Hydrologic Engineering Center Hydrologic Modeling System (HEC-HMS) computer program for the hydrologic analysis of rainfall/runoff (USACE, 2006). There are three primary components to the HEC-HMS modeling system, Basin Model, Metrological Model, and Control Model. The Control Model simply specifies the timing components for running the model start time, end time and time step and are discussed in detail in the HECHMS User Manual (USACE, 2006).

4.3.2 Design Rainfall

The Meteorological Model specifies the rainfall used to drive the model. HEC-HMS allows the user to use gauged data or synthetic design storms. The City of Rapid City relies on a frequency based approach for development of a synthetic design storm. The intensity-duration-frequency data (National Oceanic and Atmospheric Administration, 1977) for Rapid City is used to develop two hour design storms for selected frequencies. The frequencies requiring analysis to meet Rapid City's drainage criteria are the 2, 10 and 100 year return periods. For consistency of analysis the frequency based design storm approach will be used. This approach is clearly described in the HEC-HMS user manual and requires entry of the total rainfall depth at specified durations for a specified frequency. The duration, rainfall depths for the three required frequencies are given in Table 4-2. These rainfall depths can be directly entered into HECHMS for the frequency based meteorological model.

Table 4-2

Depth, duration and frequency data for development of design storms using the frequency based method in HECHMS.

(1)Duration (min)	Design Storm Depth (inches)		
	2-year	10-year	100-year
5	0.36	0.53	0.79
15	0.69	1.04	1.57
60	1.05	1.86	2.95
120	1.20	1.98	3.06
180	1.25	2.10	3.15
360	1.55	2.35	3.58
720	1.70	2.70	4.05
1440	2.00	3.07	4.55

(1) Durations greater than 2- hour storms provided for use in special situations.

A five minute time step shall be used in development of design storm.

Storm peak shall occur at the first quartile.

The depth-duration-frequency data from Table 4-2 can be used to create design storm durations from 1-hr to 24-hr.

4.3.3 Rainfall-Runoff Methodologies

1) The Basin Model component within HECHMS defines the physical representation of the watershed being analyzed. Initially, the watershed is represented by developing the basin schematic which represents sub basins, junctions and routing elements (reaches,

detention structures etc). For each of these elements the methodology to be used to perform the analyses is selected from several available within the model. The general categories of hydrologic process represented are losses (infiltration and initial abstraction), transformation (conversion of excess rainfall to watershed runoff hydrograph), and routing (channel routing and detention storage routing). HECHMS provides several methods for each of the hydrologic processes represented in the model. For consistency of analysis one method has been chosen to be used for rainfall-runoff analysis in Rapid City. The HEC-HMS user manual (USACE, 2006) and technical reference (USACE, 2000) provide in- depth discussion and explanation of all methods with in the model. Additionally, the Applications Guide (USACE, 2002) provides several example applications using the various methods available in the model. The discussion here focuses on the parameters and coefficients used for each of the methods.

2) Losses

The methodology selected for representation of rainfall losses is the Green-Ampt (GA) method. The GA method was initially developed in 1911 by Green and Ampt (Gupta, 2001). Its initial limited use was due to the computational requirements and lack of available soils information. With current computer modeling capabilities and the availability of detailed digital soils information the GA methodology has become one of the prominent infiltration loss models in hydrologic analysis. The advantages of using the GA methodology are 1) it is a simple model, 2) it is physically (theoretically) based on Darcy's law (i.e. it is not strictly empirical), 3) its parameters have physical significance and are computed from soil properties, 4) it has been used with good results for profiles that become dense with depth, profiles where hydraulic conductivity increases with depth, for soils with partially sealed surfaces and for soils having non-uniform initial water contents (Gupta 2001). Additionally, the physical basis results in less analysis variability and detailed soils information on the necessary soils parameters is readily available. The required GA parameters for the Rapid City area have been developed and are provided as part of this manual. The parameters needed for the Green-Ampt approach are initial abstraction, saturated hydraulic conductivity; initial soil moisture deficit, capillary suction head, and percent hydraulically connected impervious area.

4.3.4 Initial Abstraction

Initial abstraction and impervious area must be determined by the user based on various characteristics of the basin being modeled. Initial abstraction represents the storage of water in surface depressions on the watershed and is a function of various characteristics including land slope and land cover. As land slope increases the initial abstraction decreases. Initial abstraction is less for impervious areas than for pervious areas. Some watersheds within the Rapid City region (especially to the west) will include forested land cover. Heavily forested areas will reduce the volume of rainfall due to interception. For these areas initial abstraction should include interception storage. Table 4-3 provides guideline values for initial abstraction.

Table 4-3
Recommended values for initial abstraction used in the HEC HMS loss model

Land Cover (pervious areas only)	Initial Abstraction (inches)	
	Range	Recommended
Lawn and Grass	0.20 – 0.50	0.35
Open fields and developed forest	0.20 – 0.60	0.40
Undeveloped Forest	0.4 to 1.0	0.80

The designer must justify use of values other than those recommended above.

4.3.5 Hydraulically Connected Impervious Area

Hydraulically connected impervious area is the impervious area that is hydraulically controlled by direct runoff to a curb and gutter and subsequent channel drainage. Runoff from impervious area that is directed back over pervious must be allowed enough time to infiltrate to not be considered hydraulically connected. It is the City's objective to promote reduction in hydraulically connected impervious area. Reducing the hydraulically connected impervious area reduces the peak, volume and pollutant load produced by rainfall-runoff. The hydraulically connected impervious area must be determined by the user on a case by case basis. Within HECHMS impervious area generates 100 percent runoff.

In determining impervious area the designer will use and must determine the effective impervious area (EIA) of the basin or sub basin of interest. Effective impervious area (EIA) is the portion of the mapped impervious area (MIA) within a basin that is directly connected to the drainage collection system. EIA includes street surfaces, paved driveways connecting to the street, sidewalks adjacent to curbed streets, rooftops which are hydraulically connected to the curb, and parking lots.

Average basins are those where the local collector systems for the urban areas of the basin are predominantly storm sewered with curb and gutter inlets, no dry wells or other drainage retention areas are known to exist, and the roof tops of the single family residential areas are not connected to or piped directly to the street curb.

EIA is usually measured as a percentage of total basin or sub basin area. In traditional urban runoff modeling, the EIA for a given basin is usually less than the MIA. However, in highly urbanized basins, EIA values can approach and equal MIA values.

The following equation is for drainage planning purposes, either DBDP's or sub-division sized projects. In the case of detailed design calculations for building permits, the actual EIA shall be calculated, based on the proposed design, rather than the Drainage Planning equation.

The following equation (Sutherland) will be used in determining EIA for existing or proposed developed areas:

$$EIA = 0.1\ (MIA)^{1.5} \qquad \text{(Eq. 4-3-1)(Sutherland)}$$

Where:

EIA = Effective Impervious Area

MIA = Mapped Impervious Area

MIA ≥ 1

4.3.6 Soil Parameters

The soils parameters needed for the GA method are saturated hydraulic conductivity (K_s), initial soil moisture deficit ($\Delta\theta$) and average capillary suction head at the wetting front (ψ_{avg}). The spatial distribution of these parameters has been developed using the STATSGO database (U.S. Department of Agriculture, 1993). The SURGO data base is a digital representation of the detailed county soils information developed by the Natural Resources Conservation Service (originally the Soil Conservation Service). The specific values for each parameter are linked to the soils data based on the soil type. The soil types and specific parameters used to represent the Rapid City are based on analysis of several soil samples from many States. Table 4-4 provides the soil parameters to be used.

Table 4-4
Green and Ampt Soil Parameters

Soil Class	Porosity	Effective Porosity	Wetting front soil suction head (cm)	Wetting front soil suction head (in)	Hydraulic conductivity (cm/h)	Hydraulic conductivity (in/h)
Sand	0.437 (0.374-0.500)	0.417 (0.354-0.480	4.95 (0.97-25.36)	1.949	11.78	4.638
Loamy sand	0.437 (0.363-0.506)	0.401 (0.329-0.473)	6.13 (1.35-27.94)	2.413	2.99	1.177
Sandy loam	0.453 (0.351-0.555)	0.412 (0.283-0.541)	11.01 (2.67-45.47)	4.335	1.09	0.429
Loam	0.463 (0.375-0.551)	0.434 (0.334-0.534)	8.89 (1.33-59.38)	3.500	0.65	0.256
Silt loam	0.501 (0.420-0.582)	0.486 (0.394-0.578)	16.68 (2.92-95.39)	6.567	0.34	0.134
Sandy clay loam	0.398 (0.332-0.464)	0.33 (0.235-0.425)	21.85 (4.42-108.0)	8.602	0.15	0.059
Clay loam	0.464 (0.409-0.519)	0.309 (0.279-0.501)	20.88 (4.79-91.10)	8.220	0.10	0.039
Silty clay loam	0.471 (0.418-0.524)	0.432 (0.347-0.517)	27.3 (5.67-131.50)	10.748	0.10	0.039
Sandy clay	0.43 (0.370-0.490)	0.321 (0.207-0.435)	23.9 (4.08-140.2)	9.409	0.06	0.024
Silty clay	0.479 (0.425-0.533)	0.423 (0.334-0.512)	29.22 (6.13-139.4)	11.504	0.05	0.020
Clay	0.475 (0.427-0.523)	0.385 (0.269-0.501)	31.63 (6.39-156.5)	12.453	0.03	0.012

Table 4-4 provides direct values for saturated hydraulic conductivity and capillary suction head. The effective porosity represents the total effective soil moisture. The initial soil moisture deficit is the difference between the initial moisture content (ambient conditions) and total effective porosity. Thus, the modeler must assume an initial moisture content and subtract that from the total effective porosity to determine the initial moisture deficit. To develop a spatial distribution of initial moisture deficit for Rapid City, The initial

moisture content was assumed to be half of the field capacity for any given soil type. Field capacity represents the maximum moisture content a soil can hold against gravity. This approach results in values of initial moisture content ranging from 0.1 to 0.25 and initial moisture deficit values ranging from 0.15 to 0.25. These are reasonable average values and well within the sensitivity of the model to this parameter.

4.3.7 Rainfall Runoff Transformation

The method selected for transformation of excess rainfall to a watershed runoff hydrograph is the Snyder Unit Hydrograph (SUH) method. The Snyder method consists of two primary equations;

$$t_p = C_t (LL_c)^{0.3} \qquad \text{(Eq. 4-3-2)}$$

where:

tp = lag time (hrs)

Ct = lag time coefficient

L = length from the outlet along the main drainage channel (longest flow path) to the drainage divide (miles)

Lc = length from the outlet measured along the main drainage channel to a point perpendicular to the centroid of the drainage basin (miles), and

$$Q_p = \frac{C_p A}{t_p} \qquad \text{(Eq. 4-3-3)}$$

where:

Qp = the peak flow of the unit hydrograph (cfs)

Cp = peaking coefficient

A = the area of the drainage (mi^2)

tp = lag time (hrs)

The HECHMS model requires the user to enter the lag time, t_p, and peaking coefficient, Cp. To calculate the lag time the user must measure L, L_c and S, and select an appropriate value for Ct. Ct represents variations in watershed slope and storage (Dodson & Associates, 1991). Several references provide values and ways to estimate Ct (Viessman, 2002). Based on the available information recommended Ct values for different land uses in the Rapid City area are given below.

Table 4-5
Recommended values for Ct (lag time coefficient) used in the HEC HMS Snyder unit hydrograph methodology

Land Cover	Lag Time Coefficient (C_t)	
	Range	Recommended
Mountains,forests,good meadows	1.8 to 2.2	2.0
Range land, pastures, foot hills	0.5 – 1.1	0.80
Urban sewered	0.3 to 0.9	0.60

The second coefficient necessary to use the SUH method is Cp. Cp represents flood wave routing and storage conditions within the watershed and again various approaches to estimating Cp are referenced in the literature (Viessman, 2002). Based on the available information recommended Cp values for different land uses in the Rapid City will range from 0.40 to 0.80 (mean of 0.6) with lower values representing less steep slopes and higher numbers for steeper slopes.

4.3.8 Channel Routing

The transform model creates the outlet hydrograph for each sub-basin representing the runoff generated from each individual sub-basin. However many of the sub-basins contain a reach of river which runs through the entire basin. This means that the hydrograph created for a basin does not account for the water flowing into the basin in the channel coming from upstream basins. This water must be properly routed through the sub-basin and then added to the hydrograph for the sub-basin at the outlet. Part of this process involves accounting for the travel time of a flood wave traveling through the channel as well as any attenuation that will occur as a function of the channel shape and roughness. It is this combination of channel hydrographs and individual sub-basin hydrographs that will create the final storm water runoff hydrograph produced by a storm event.

As with the other basin model options, there are several options for routing water through the stream channel. The primary channel routing options are the Kinematic Wave and the Muskingum-Cunge standard and eight point options. The method recommended for applications in the Rapid City area is the Muskingum-Cunge.
This method is based on the continuity and momentum equation and accounts for gradually varied flow by estimating the attenuation that will occur. This method is a semi-hydraulic routing method, which is based on the physical characteristics of the drainage channel. The input parameters needed are channel cross section shape, channel bottom width (or diameter), bank side slopes (for open channels), reach length, slope of the energy grade line (usually taken as the slope of the channel), and the Manning's *n* roughness coefficient. The Muskingum-Cunge method options for channel shape are either prism (trapezoidal) or circle. HEC-HMS also contains an option called the Muskingum-Cunge 8-point method. This is the same method as the Muskingum-Cunge standard except for the level of channel data. In the 8-point method eight stationing points including the elevations can represent a somewhat more detailed cross section. The calculations are performed in the same way as the standard method.

4.3.9 Detention Pond Routing

HECHMS uses the standard storage indication (level pool reservoir routing) methodology for routing hydrographs through detention storage structures. The model enables the user to input elevation-storage-discharge data for the routing procedure. Additionally, the user can input elevation-area data and the physical characteristics of the outlet structure and the model will develop the storage discharge function. This option provides the user the ability to readily evaluate various design options. The routing tables are entered as time series data and reference to each routing structure. Detailed description of detention storage routing can be found in the user manual, technical reference and applications guide (USACE, 2006, 2002 and 2000).

4.3.10 Additional References

National Oceanic and Atmospheric Administration, 1977. "Five to Sixty Minute Precipitation Frequency for the Eastern and Central United States." NOAA Technical Memorandum NWS HYDRO-35, U.S. Weather Bureau Technical Paper 40

U.S. Army Corps of Engineers, 2006. "Hydrologic Modeling System HEC-HMS, User's Manual" US Army Corps of Engineers, Hydrologic Modeling Center, Davis, CA.

U.S. Army Corps of Engineers, 2002. "Hydrologic Modeling System HEC-HMS, Application Guide" US Army Corps of Engineers, Hydrologic Modeling Center, Davis, CA.

U.S. Army Corps of Engineers, 2000. "Hydrologic Modeling System HEC-HMS, Technical Reference Manual" US Army Corps of Engineers, Hydrologic Modeling Center, Davis, CA.

Gupta, Ram S., 2001 "Hydrology and Hydraulic Systems" Second Edition, Waveland Press, Inc. Prospect Heights, IL.

Bedient, P.B. and Huber W.C. 2002. "Hydrology and Floodplain Analysis" Third Edition, Prentice Hall, Upper Saddle River, NJ.

Viessman, Jr W. and Lewis, G.L. 2002. "Introduction to Hydrology" Fifth Edition, Prentice Hall, Upper Saddle River, NJ.

Chow, V.T., Maidment, D.R. and Mays, L.W., 1988. "Applied Hydrology" McGraw Hill, Inc.

U.S. Department of Agriculture, 1993. "State Soil Geographic Data Base (STATSGO), Data Users Guide" US Department of Agriculture, Soil Conservation Service, Miscellaneous Publication Number 1492.

Sutherland, Roger C. "Methodology for Estimating Effective Impervious Area for Natural, Partially Urbanized and Urban Watersheds Based on Published U.S.G.S. Data for Watersheds Throughout the Metropolitan Areas of Portland and Salem, Oregon"

4.4 Street Drainage

4.4.1 General Statement

Streets serve an important and necessary drainage service even though their primary function is for the movement of traffic. Traffic and drainage uses are compatible up to a point, beyond which drainage must be secondary to traffic needs.

Gutter flow in streets is necessary to transport runoff water to storm inlets and to major drainage channels. Good planning of streets can substantially help in reducing the size of, and sometimes eliminating the need for, a storm sewer system in newly urbanized areas.

4.4.2 Effects of Stormwater on Street Capacity

The storm runoff which influences the traffic capacity of a street can be classified as follows:

1) Sheet flow across the pavement as falling rain flows to the edge of the pavement.

2) Runoff flowing adjacent to the curb.

3) Stormwater ponded at low points.

4) Flow across the traffic lane from external sources, or cross-street flow (as distinguished from water falling on the pavement surface).

5) Splashing of any of the above types of flow on pedestrians.

Each of these types of storm runoff must be controlled within acceptable limits so that the street's main function as a traffic carrier will not be unduly restricted.

The effect of each of the above categories of runoff on traffic movement are discussed in the following sections.

4.4.3 Interference Due to Sheet Flow Across Pavement

Rainfall which falls upon the paved surface of a street or road must flow overland as sheet flow until it reaches a channel. Channels can be created either by curbs and gutters or by roadside ditches. The direction of flow on the street may be determined by the vector addition of the street grade and the crown slope, which is equivalent to drawing the perpendicular to a contour line on the road as shown in Figure 4-1. The depth of sheet flow will be essentially zero at the crown of the street and will increase as it proceeds towards the channel. Traffic interference due to sheet flow is essentially of two types: hydroplaning and splash.

1) Hydroplaning:

Hydroplaning is the phenomenon of vehicle tires actually being supported by a film of water which acts as a lubricant between the pavement and the vehicle. It generally occurs at speeds commensurate with arterial streets and its effect can be minimized by achieving a relatively rough pavement which will allow water to escape from beneath the tires by pavement grooving to provide drainage, or by reducing travel speed.

2) Splash:

Traffic interference due to splash results from sheet flow of excessive depth caused by water traveling a long distance or at a very low velocity before reaching a gutter. Increasing the street crown slope will decrease both the time and distance required for water to reach the gutter. The crown slope, however, must be kept within acceptable limits to prevent side-slipping of traffic during frozen surface conditions and to allow the opening of doors when parked adjacent to curbs. An exceedingly wide pavement section contributing flow to one curb will also affect the depth of sheet flow. This may be due to super elevation of a curve, off-setting of the street crown due to warping of curbs at intersections, or many traffic lanes between street crown and the gutter. Consideration should be given to all of these factors to maintain a depth of sheet flow within acceptable limits.

4.4.4 Interference Due to Gutter Flow

Water which enters a street, either sheet flow from the pavement surface or overland flow from adjacent land areas, will flow in the gutter of the street until it reaches an outlet, such as a storm sewer or a channel. Figure 4-1 shows the configuration of gutter flow moving down a street when there is a storm sewer system. As the flow progresses downhill and additional areas contribute to the runoff, the width of flow will increase and progressively infringe upon the traffic lane. If vehicles are parked adjacent to the curb, the width of spread will have little influence on traffic until it exceeds the width of the vehicle by several feet. However, on streets where parking is not permitted, as with many arterial streets, whenever the flow width exceeds a few feet it will significantly affect traffic. Field observations show that vehicles will crowd adjacent lanes to avoid curb flow.

As the flow width increases it becomes impossible for vehicles to operate without driving through water, and they again begin to use the inundated lane. At this point the traffic velocities will be significantly reduced as the vehicles begin to drive through the deeper water. Splash from vehicles traveling in the inundated lane obscures the vision of drivers of vehicles moving at a higher rate of speed on the open lane.

Eventually, if width and depth of flow become great enough, the street will become ineffective as a traffic carrier. During these periods it is imperative that emergency vehicles such as fire trucks, ambulances, and police cars be able to traverse the street by moving along the crown of the roadway.

The street classification is also important when considering the degree of interference to traffic. A local street, and to a lesser extent a collector street, could be inundated with little effect upon vehicular travel. The small number of cars involved could move at a low rate of speed through the water even if the depth were four to six inches. However, reducing the speed of arterial traffic affects a greater number of private, commercial, and emergency vehicles.

4.4.5 Interference Due to Ponding

Storm runoff ponded on the street surface because of a change in grade or the crown slope of intersecting streets has a substantial effect on traffic. A major problem with ponding is that it may reach depths greater than the curb and remain on the street for long periods of time. Another problem is that ponding is localized in nature and vehicles may enter a pond moving at a high rate of speed.

The manner in which ponded water affects traffic is essentially the same as for curb flow; the width of spread onto the traffic lane is the critical parameter. Ponded water will often a street to a complete halt. In this case, incorrect design of only one facet of an entire street and storm drainage system will render the remainder of the street system useless during the runoff period.

4.4.6 Interference Due to Water Flowing AcrossTraffic Lane

Whenever storm runoff moves across a traffic lane, a serious impediment to traffic flow occurs. The cross flow may be caused by super elevation of a curve or a street intersection exceeding the capacity of the higher gutter on a street with cross fall. The problem associated with this type of flow is the same as for ponding in that it is localized in nature and vehicles may be traveling at high speed when they reach the location. If the velocity of vehicles is naturally slow and use is light, such as on local streets, cross-street flow does not cause sufficient interference to be objectionable.

The depth and velocity of cross-street flow should always be maintained within such limits that it will not have sufficient force to affect moving traffic. If a vehicle which is hydroplaning enters an area of cross street flow, even a minor force could be sufficient to move it laterally towards the gutter.

At certain intersections the flow may be trapped between converging streets and must either flow over one street or be carried underground. If the vehicles crossing the intersection are required to stop, then very little hazard exists to the traveling public. This is the basis for the assumption that valley gutters are acceptable across a local street where it intersects another local or collector street. Another point in favor of the use of valley gutters is the continuation of the grade of the dominant street. If the crown of the local street is allowed to coincide with the crown of the major street, the outside traffic lanes of the major street will have a "hump" at the intersection.

4.4.7 Interference Due to Traffic Medians

Current design of collector and arterial streets suggests that medians are often used to separate traffic flow. Those medians create an impediment to cross flow of water and effectively create a curb flow in the center oaf a street. When the media ends, cross flow of the storm water will exist thereby flooding travel lanes of the street. Care must be exercised in designing these barriers so that the storm water flow is properly accommodated.

A raised median in a street reduces the street width for storm water purposes. As an example, a four lane street with a center median is effectively a two lane street, for storm water conveyance purposes.

4.4.8 Effect on Pedestrians

In areas where pedestrians frequently use sidewalks, splash due to vehicles moving through water adjacent to the curb is a serious problem. It must also be kept in mind that under certain circumstances, pedestrians will be required to cross ponded water adjacent to curbs.

Since the majority of pedestrian traffic will cease during the actual rainstorm, less consideration need be given to the problem while the rain is actually falling. However, ponded water, remaining after the storm has passed, must be negotiated by pedestrians.

Streets should be classified with respect to pedestrian traffic as well as vehicular traffic. As an example, streets which are classified as local for vehicles and located adjacent to a school are arterials for pedestrian traffic. Allowable width of gutter flow and ponding should reflect this fact.

4.4.9 Design Criteria

Design criteria for the collection and transport of runoff on public streets is based on a reasonable frequency of traffic interference. That is, depending on the street classification, certain traffic lanes can be fully inundated once during the initial design storm return period. For example, a local street flow is allowed to cover the crown during a 10-year frequency storm. During the 10-year period, lesser storms will occur which will produce less runoff and will not inundate the entire street.

Planning and design for urban storm runoff must be considered from the viewpoint of both the regularly expected storm occurrence, that is, the initial storm, and the major storm occurrence. The initial storm will have a frequency of one in 10 years. The major storm will have a return period of 100 years. The objectives of the major storm runoff planning and design is to eliminate major damage and loss of life. The initial drainage system is necessary to eliminate inconvenience, frequently recurring initial damage, and high street maintenance costs.

The initial (10 year) and major (100 year) storms shall be as defined in Chapter 4.2.

1) Street Capacity for Initial Storms;

Determination of street capacity for the 10 year storm shall be based upon pavement encroachment. The pavement encroachment for the 10 year storm shall be limited as set forth in Table 4-6.

Table 4-6

Allowable 10 year Storm Runoff Encroachment

Street Classification	Maximum Encroachment
Local	No curb overtopping. Flow may spread to crown of street.
Collector and Two Lane Arterials	No curb overtopping. Flow spread must leave at least 12 feet of pavement free of water.
Three Lane Arterials	No curb overtopping. Flow spread must leave at least 24 feet of pavement free of water.
Arterials with More than Three Lanes*	No curb overtopping. Flow spread must leave at least 36 feet of pavement free of water.

* Arterials with raised medians use collector and two lane arterial criteria.

The storm sewer system should begin at the point where the maximum encroachment is reached. Development of the major drainage system is encouraged so that the minor runoff is removed from the streets, thus moving the point at which the storm sewer system must begin further downstream.

2) Calculating Capacity:

When the allowable encroachment has been determined, the gutter (that portion of the street used to convey runoff) capacity shall be computed using the modified Manning's Equation.

$$Q = \frac{0.56}{n} S_x^{1.67} S^{0.5} T^{2.67} \qquad \text{(Eq. 4-4-1)}$$

where:

Q = discharge, in cubic feet per second

S_x = cross slope, in feet per foot

S = longitudinal slope, in feet per foot

T = width of flow (spread), in feet

n = Manning's roughness coefficient

Figure 4-2 can be used for a direct solution of the above equation using Manning's "n" value of 0.016. For other values of "n", divide the value of Q_n by "n". Manning's "n" values for different street and gutter roughness conditions are presented in Table 4-7. For the discharge of a composite cross slope, use Figure 4-2 and Figure 4-3. Figure 4-4 provides the solution for a family of conveyance-spread curves for a typical composite gutter section for the City of Rapid City with varying cross slopes.

Table 4-7

Surface Type	"n" Value
Concrete gutter troweled finish	0.012
Asphalt pavement	0.016
Concrete gutter with asphalt pavement	0.015
Concrete pavement	0.015
Brick	0.016

3) Calculating Velocity:

The average velocity of flow in the gutter can be calculated by modifying Manning's Equation. Figure 4-5 is a nomograph of the velocity in a triangular gutter section. The equation assumes that the discharge in the gutter varies uniformly between sections.

$$V = \frac{1.12}{n} S^{0.5} S_x^{0.67} T^{0.67} \qquad \text{(Eq. 4-4-2)}$$

where:

V = velocity, in feet per second

S = longitudinal slope, in feet per foot

S_x= cross slope, in feet per foot

T = width of flow (spread), in feet

n = Manning's roughness coefficient

If a channel has zero flow at the upstream end, the average velocity occurs at the point where spread is equal to 65 percent of the maximum spread. For channel sections with discharges greater than zero at the upstream section, the spread at average velocity, Ta, is given by Table 4-8. In Table 4-8, Tl is the spread at the upstream section and T2, is the spread at the downstream section. The average spread is then used in Figure 4-5 or Equation 4-4-2.

Table 4-8

Spread at Average Velocity in a Triangular Gutter Section	
$\frac{T1}{T2}$	$\frac{Ta}{T2}$
0.0	0.65
0.1	0.66
0.2	0.68
0.3	0.70
0.4	0.74
0.5	0.77
0.6	0.82
0.7	0.86
0.8	0.90

4.4.10 Street Capacity for Major Storm

1) Determination of the allowable capacity for the 100 year storm event shall be based upon allowable depth and inundated area. The allowable depth and inundated area for the 100 year storm event shall be limited as set forth in Table 4-9.

2) Calculating Capacity:

Based upon the allowable depth and inundated area as determined from Table 4-9, the street capacity shall be calculated. Manning's Formula shall be utilized with an "n" value applicable to the actual boundary conditions encountered.

Table 4-9
Allowable 100 year Storm Runoff Inundation

Street Classification	Major Storm Frequency	Allowable Depth and Inundated Areas
Local	100-year	Residential dwellings, public, commercial, and industrial buildings, shall not be inundated at the ground line, unless buildings are flood-proofed. The depth of water over the gutter flow line shall not exceed 18 inches.
Collector	100-year	Residential dwellings, public, commercial, and industrial buildings, shall not be inundated at the ground line, unless buildings are flood-proofed. The depth of water over the gutter flow line shall not exceed 12 inches.
Arterial	100-year	Residential dwellings, public, commercial and industrial buildings, shall not be inundated at the ground line, unless buildings are flood-proofed. The depth of water over the gutter flow line shall not exceed 12 inches.

4.4.11 Intersection Layout Criteria

The following design criteria are applicable at intersections of urban streets. Gutter capacity limitations covered in Section 4.4.2 shall apply along the street, while this section shall govern at the intersection.

1) Gutter Capacity

a) Pavement Encroachment:: Limitations at intersections for pavement encroachment shall be as given in Table 4-10.

Table 4-10
Allowable Cross Street Flow

Street Classification	10-year Storm Flow	100-year Storm Flow
Local	6 inches of depth in cross pan	18 inches of depth above gutter flow line
Collector	Where cross pans allowed, depth of flow should not exceed 6 inches.	12 inches of depth above gutter flow line.
Arterial	None	No cross flow. Maximum depth at upstream gutter on road edge of 12 inches.

4.5 Storm Inlets

4.5.1 General Statement

The hydraulic capacity of a gutter inlet depends upon its geometry and upon the characteristics of the gutter flow. The inlet capacity governs both the rate of water removal from the gutter and the amount of water that can enter the storm drain system. Many costly storm drains flow at less than design capacity because the storm runoff cannot get into the drains. Inadequate inlet capacity or poor inlet location may cause flooding on the traveled way which creates a safety hazard or at times interrupts traffic.

The inlet is frequently located in or near the path of vehicular traffic. Water-borne debris and trash may be deposited on the inlet causing complete or partial clogging. Often freedom from clogging and noninterference with traffic requires an inlet of a specific type rather than the most efficient inlet from a hydraulic point of view. For example, a curb-opening inlet might be used where a grate inlet would be more efficient.

4.5.2 Inlet Types

Gutter inlets can be divided into four major classes, each with many variations. These classes are. 1) curb-opening inlets, 2) gutter inlets, 3) combination inlets and 4) area inlets. Each type of inlet shall be installed with a depression of the gutter and may be a single or a multiple inlet (two or more closely spaced inlets acting as a unit). Two identical units placed end to end are called double inlets.

A brief description of the inlet types to be used in Rapid City follows.

1) Grate Inlets. Grate inlets consist of an opening in the gutter or ditch covered by a grate. Grate inlets used in Rapid City are type A, Type B, Type C and Precast Tee Type Manhole. Type B inlets have a vaned grate with curb opening box and are considered a grate inlet for continuous grade capacity calculations. Type A and Type C inlets are flat rectangular surface grates.

2) Curb Opening Inlets. Curb opening inlets are vertical openings in the curb covered by a top slab. Curb inlets used in Rapid City are Type E inlets. Type E inlets have a depressed gutter throat section.

3) Slotted Inlets. Slotted inlets consist of pipe cut along the longitudinal axis with bars perpendicular to the opening to maintain the slotted opening. Slotted inlets are manufactured of CMP. Use of CMP slotted inlets is allowed in Rapid City without the prerequisite of obtaining a variance to use CMP storm sewer.

3) Combination inlets. Combination inlets consist of both a curb opening inlet and a grate placed in a side by side combination. The Type B inlet in a sag condition is considered a combination inlet. Type B inlets are considered a grate inlet for continuous grade capacity calculations.

4) SDDOT median Drain Inlets. These are inlet details prepared by the SDDOT for use in medians and ditches. Inlets are SDDOT Type L median Drain, Type M Median Drain, and Type N Median Drain.

5) Special Inlets. Special inlets consist of inlets other than those described above and require written authorization for use.

4.5.3 Inlet Capacity

The term inlet capacity is used herein to mean the catch of the inlet under a given set of conditions rather than the maximum water that can be intercepted by the inlet if the discharge is increased without limit. The efficiency of an inlet is the percent of total flow that the inlet will intercept under a given set of conditions. The efficiency of an inlet varies with change in cross slope, longitudinal slope, total gutter flow, and pavement roughness.

In mathematical form, efficiency, E, is defined by the following equation:

$$E = \frac{Q_i}{Q} \qquad \text{(Eq. 4-5-1)}$$

where:

E = efficiency of inlet

Qi = intercepted flow by inlet, in cubic feet per second

Q = total gutter flow, in cubic feet per second

The discharge that bypasses the inlet, Qc, is termed carry-over or bypass. The interception capacity of all inlet configurations increase with increasing flow rates, and inlet efficiency generally decreases with increasing flow rates.

Table 4-11 provides the designer with an adjustment factor, F, to compensate for clogging of inlets. Inlet capacity shall be calculated in accordance with the Federal Highway Administration Urban Drainage Design Manual Hydraulic Engineering Circular No. 22 (current edition).

Table 4-11

Inlet Clogging Factor (Percent of Inlet Clogged)

	F
Grate Inlets	40%
Combination Inlets	33%
Curb Openings	0%

4.5.4 Inlet Location

In general, inlets should be placed at all low points in the gutter grade and at intersections to prevent the gutter flow from crossing traffic lanes of the intersecting road. In urban locations, inlets are normally placed upgrade from pedestrian crossings to intercept the gutter flow before it reaches the cross-walk. Where pavement surfaces are warped, as at cross streets, ramps, or in transitions between super elevated and normal sections, gutter flow should be picked up before the cross slope

of the pavement begins to change in order to lessen water flowing across the roadway and to prevent icing.

Where a curbed roadway crosses a bridge the gutter flow should be intercepted and not be permitted to flow onto the bridge.

1) Spacing of Inlets on a Continuous Grade:

Inlets should be spaced so as to limit the spread of the water on the pavement to the criteria outlined in Section 4.4.

With the maximum spread fixed and with a given pavement cross slope and longitudinal slope, the flow in the gutter is also fixed and can be calculated as explained in Section 4.4. The spacing of inlets is equal to the length of pavement needed to generate the discharge corresponding to the allowable spread on the pavement. The flow bypassing each inlet q must be included in the flow arriving at the next inlet.

2) Spacing of Inlets in a Sag:

Three inlets should be placed in a sag vertical curve on all arterial streets, one at the low point and one on each side of this point, where the grade elevation is approximately 0.2 feet higher than that at the low point. The inlets should be spaced so as to limit the spread of water on the pavement to the criteria outlined in Section 4.4.

Sag vertical curves differ one from another in the potential for ponding, and criteria adopted for inlet spacing in sags should be applied only where traffic could be unduly disrupted if an inlet became clogged or runoff from the design storm were exceeded. Therefore, criteria adopted for inlet spacing in sag vertical curves are not applicable to the sag curve between two positive or two negative longitudinal slopes. Also, they should not be applied to locations where ponding depths could not exceed curb height and ponding widths would not be unduly disruptive, as in sag locations on embankment.

Where significant ponding can occur, in locations such as underpasses and in sag vertical curves in depressed sections, it is good engineering practice to place flanking inlets on each side of the inlet at the low point in the sag. The flanking inlets should be placed so that they will limit spread on low gradient approaches to the level point and act in relief of the inlet at the low point if it should become clogged or if the design spread is exceeded. Table 4-12 shows the spacing required for various depth at curb criteria and vertical curve lengths defined by the following dimensionless coefficient:

$$K = \frac{L}{A} \qquad \text{(Eq. 4-5-2)}$$

where:

K = dimensionless coefficient

L = length of vertical curve, in feet

A = algebraic difference in approach grades (G2 - G1)

The AASHTO policy on geometrics specifies maximum K values is shown in Table 4-12.

Table 4-12

Distance X to Flanking Inlets in Sag Vertical Curve Locations

	Depth at Curb (Inches)							
"K" L/A	0.1	0.2	0.3	0.4	0.5	0.6	0.7	0.8
20	20	28	35	40	45	49	53	57
30	24	35	42	49	55	60	65	69
40	28	40	49	57	63	69	75	80
50	32	45	55	63	71	77	84	89
70	37	53	65	75	84	92	99	106
90	42	60	73	85	95	104	112	120
110	47	66	81	94	105	115	124	133
130	51	72	88	102	114	125	135	144
160	57	80	98	113	126	139	150	160
167	58	82	100	116	129	142	153	163

Notes: $X = (200dK)^{0.5}$; where X = distance from the low point.

The purpose in providing Table 4-12 is to facilitate the selection of criteria for the location of flanking inlets based on the ponding potential at the site, the potential for clogging of the inlet at the low point, design spread, design speeds, traffic volumes, and other considerations which may be peculiar to the site under consideration. A depth at curb criterion which does not vary with these considerations neglects consideration of cross slope and design spread and may be unduly conservative at some locations. Location of flanking inlets at a fixed slope rate on the vertical curve also neglects consideration of speed facilities and not at all conservative for high speed facilities.

Except where inlets become clogged, spread on low gradient approaches to the low point is a more stringent criterion for design that the interception capacity of the sag inlet. AASHTO recommends that a gradient of 0.3 percent be maintained within 50 feet of the level point in order to provide for adequate drainage. It is considered advisable to use spread on the pavement at a gradient comparable to that recommended by the AASHTO Committee on Design to evaluate the location and design of inlets upgrade of sag vertical curves. Standard inlet design and/or location may need adjustment to avoid excessive spread in the sag curve.

4.6 Storm Sewers and Appurtenances

4.6.1 General Statement

It is the purpose of this section to consider the significance of the hydraulic elements of storm sewers and their appurtenances to a storm drainage system. Hydraulically, storm drainage systems are conduits (open or enclosed) in which unsteady and non-uniform free flow exists. Storm Storm sewers accordingly are designed for open-channel flow to satisfy as well as make possible the requirements for unsteady and non-uniform flow. Steady flow conditions may or may not be uniform.

All storm sewers shall be designed by the application of the Manning's Equation when flowing in open channel conditions. The hydraulic grade line shall be checked for storm sewer designs to determine if the open channel flow assumption is valid. In the preparation of hydraulic designs, a thorough investigation shall be made of all existing structures and their performance on the waterway in question.

After the computation of the quantity of storm runoff entering each inlet, the storm sewer system required to carry the runoff is designed. It should be borne in mind that the quantity of flow to be carried by any particular section of the storm sewer system is not the sum of the inlet design quantities of all inlets above that section of the system, but is less than the straight total. This situation is due to the fact that as the time of concentration increases the rainfall intensity decreases.

1) Major Storm System:

Check the proposed system for the 100-year storm event. Modify the proposed system or provide additional flow capacity as required to accommodate the 100-year storm event runoff according to the requirements stated in Sections 4.1, 4.3, 4.4, and 4.5.

4.6.2 General Criteria

1) Frequency of Design Runoff :

The frequency of design runoff is a function of operational and economic criteria with a special emphasis on public safety. As discussed in other sections of this Manual some types of facilities do not require high levels of protection and periodic flooding is not objectionable. However, for all facilities the designer must consider the impact of a 100-year event.

2) Pipe Sizes and Material Types:

Pipes, which are to become an integral part of the public storm sewer system, shall have a minimum equivalent diameter of 12" if there are no bends and 18 inches if there are any bends. Pipe may be "green" PVC for sizes 12" through 18" and shall be reinforced concrete pipe (RCP) for all larger sizes. All pipe design and installation must meet the manufacturer's recommendations for minimum depth of cover.

Pipe design service life shall be a minimum 50 years as certified by the manufacturer. All manufacturer requirements for which the design service life is based must be met by the engineer.

The minimum allowable coefficient of roughness for concrete pipe for direct solution of Manning's Equation is 0.013 and for PVC pipe is 0.010.

3) Velocities and Grades:

a) Minimum Grades:

Storm sewers should operate with velocities of flow sufficient to prevent excessive deposition of solid material; otherwise, objectionable clogging may result. The controlling velocity occurs near the bottom of the conduit and is considerably less than the mean velocity. Storm sewers shall be designed to have a minimum mean velocity of 2.5 fps for the 2-year storm condition. Outlets on storm sewers of minimum grade should be designed to avoid sedimentation at the outfall.

b) Maximum Velocities:

Table 4-13 shows the limits of maximum velocity for all storm sewers except downspouts

Table 4-13
Maximum Velocity in Storm Sewers

Description		Maximum Permissible Velocity
Storm Sewers	(Inlet Laterals)	No Limit
Storm Sewers	(Collectors and Mains)	20 fps

4.6.3 Manhole/Inlet Location

Manholes/inlets shall be located at intervals not to exceed 400 feet for pipe 30 inches in diameter or smaller. Manholes/inlets shall be located at conduit junctions, changes in alignment, and ends of curved sections as necessary for maintenance equipment operation.

Manholes/inlets for pipe greater than 30 inches in diameter shall be located at points where design indicates entrance into the conduit is desirable; however, in no case shall the distance between openings or entrances be greater than 600 feet.

4.6.4 Pipe Connections

Prefabricated wye and tee connections are required up to and including 24 inch x 24 inch. Connections larger than 24 inches can be made by field connections.

4.6.5 Alignment

In general, storm sewer alignment between manholes shall be straight. Long radius curves may be allowed to conform to street alignment. Short radius curves may be used on pipes 30" and larger in order to reduce head losses at junctions. Pipe deflection shall not exceed manufacturer's recommendations, unless precast or cast-in-place bends are specifically designed for deflection.

4.6.6 Flow in Storm Sewers

All storm drains shall be designed by the application of the Continuity Equation and Manning's Equation.

The following items will be followed when designing storm sewers:

1) Select pipe size and slope so that the velocity of flow will increase progressively, or at least will not appreciably decrease, at inlets, bends, or other changes in geometry or configuration.

2) Do not discharge the contents of a larger pipe into a smaller one, even though the capacity of the smaller pipe may be greater due to steeper slope.

3) At changes in pipe size from a smaller to a larger pipe, match the soffits (inside top surface) of the two pipes at the same level rather than matching the flow lines. (When necessary for minimal fall, match the 0.8 diameter point of each pipe.)

4) Conduits are to be checked at the time of their design with reference to critical slope. If the slope of the line is greater than critical slope, the unit will likely be operating under entrance control instead of the originally assumed normal flow. Conduit slope should be kept below critical slope if at all possible. This also removes the possibility of a hydraulic jump within the line.

5) Inlets and outlet treatments are required on all storm sewers in accordance with Section 4.9. Inlets and outlets shall be designed to prevent scour and erosion.

4.6.7 Hydraulic Gradient and Profile of Storm Sewers

The hydraulic grade line shall in no case be closer than one foot to the ground or street surface based on the maximum storm sewer system input unless otherwise approved by the City. The hydraulic grade line shall be based on the law of conservation of energy as expressed by the Bernoulli Equation. If the storm sewer system could be extended at some future date, present and future operation of the system must be considered

It is not necessary to compute the hydraulic grade line of a conduit section if all three of the following conditions are satisfied.

1) The slope(s) and the pipe size(s) are chosen so that the slope is equal to or greater than friction slope.

2) The inside top surfaces (soffit) of successive pipes are lined up at changes in size.

3) The water surface at the point of discharge will not rise above the top of the outlet.

In such cases the pipe will not operate under pressure and the slope of the water surface under capacity discharge will approximately parallel the slope of the invert of the pipe.

4.6.8 Total Energy Losses at Structures

The following total energy head losses at structures shall be determined for inlets, manholes, wye branches, or bends in the design of full flow closed conduits. Note total

energy losses, he include minor losses, hj and the change in velocity head, hv. See Figures 4-6 and 4-7 for details of each case.

Short radius bends may be used on 24" and larger pipes when flow must undergo a direction change at a junction or bend. Reductions in head loss at manholes may be realized in this way. A manhole shall be located at the end of such short radius bends if required for operation and maintenance.

4.6.9 Minor Head Losses at Structures

The standard method calculates structure head loss based on the exit pipe's velocity. The exit velocity head is multiplied by a user-entered coefficient to determine the loss.

$$h_s = K\left(\frac{V_o^2}{2g}\right) \qquad \text{(Eq. 4-6-1)}$$

where:

h_s = Structure head loss (ft,m)

V_o = Exit pipe velocity (ft/s, m/s)

g = Gravitational acceleration constant (ft/s^2, m/s^2

For suggested coefficient values for various structure configurations, see Figure 4-7.

4.7 Culvert Hydraulic Design

4.7.1 General Statement

The function of a drainage culvert is to pass the design storm flow under a roadway, railroad, or other feature without causing excessive backwater and without creating excessive downstream velocities.

4.7.2 Design Criteria

The design flow shall be determined as set forth in Section 4.2.

1) Design Frequency: Culverts shall, at a minimum, pass the 10 year design storm with one foot of freeboard 100 year storm shall meet the requirements of Chapter 4.4, table 4-9.

   If a FEMAA flood plain exists the design shall comply with the City flood plain ordinance or FEMA regulations, whichever is more restrictive.

2) Culvert Discharge Velocities: The velocity of discharge from culverts should have consideration given to the effect of high velocities, eddies or other turbulence on the natural channel, downstream property and roadway embankment. Inlets and outlet treatments are required on

all culverts in accordance with Section 4.9. Inlets and outlets shall be designed to prevent scour and erosion.

The maximum allowable velocity in a culvert is 20 fps.

3) Culvert Material Types: Material for culverts shall be concrete. Corrugated metal pipes are allowable under residential driveways. Other materials may be considered and exception may be granted by the City Engineer.

4) Culvert Design Methodologies: Culverts shall be designed in accordance with the current edition of the Hydraulic Design of Highway Culverts. Hydraulic Design Series No. 5 by the Federal Highway Administration (FHWA).

4.8 Open-Channel Flow

4.8.1 General Statement

Open channels designed for use in drainage systems have significant advantages in regard to cost, capacity, multiple use for recreational and aesthetic purposes, and potential for in stream storage and ground water re-charge. Disadvantages include potential right-of-way constraints and maintenance costs. Careful planning and design are needed to increase the benefits and to minimize the disadvantages. The ideal open channel is one that is a stabilized water course developed by nature over time, characterized by stable bed and banks. The benefits of such a channel are listed.

1) Available channel storage can decrease peak flows.
2) Maintenance needs can be low when the channel is properly stabilized.
3) Natural subsurface infiltration of flows is provided.
4) Native vegetation and wildlife may not have to be disturbed.
5) The channel can provide a desirable green belt and recreational area adding significant social benefits.

Generally speaking, a stabilized natural channel, or the man-made channel which most nearly conforms to the character of a stabilized natural channel, is the most efficient and the most desirable.

The use of naturally occurring channels and drainage ways is encouraged.

Channel stability, particularly in unprotected alluvial materials, is a problem in urban hydrology because of the significant increase in low flow and peak storm runoff rates. A natural channel must be studied in sufficient detail to determine the measures needed to mitigate potential bottom scour and bank cutting. Erosion control measures can be provided at reasonable cost which will preserve the natural appearance without sacrificing hydraulic efficiency. This section provides the necessary criteria and methodology for selection and design of open-channels.

Design criteria for various types of channel lining are provided in Table 4-14 and are to be used in the design of drainage channels.

4.8.2 Types of Channels

Channels are defined as natural or artificial. Natural channels include all water courses that have developed by the erosion process. Artificial channels are those constructed or significantly altered by human effort and include roadside ditches and grassed or improved channels.

1) Natural Channels: Many natural channels in urbanizing or urbanized areas have mild slop are reasonably stable, and are not in a state of serious degradation or aggredation. However, if a natural channel is to be used for carrying storm runoff from an urbanized area, the altered nature of the runoff peaks and volumes from urban development can and will cause erosion. Hydraulic analyses will be required for natural channels in order to identify the erosion tendencies. Some on-site modification of the natural channel may be required to assure a stabilized condition.

   The investigations necessary to assure that the natural channels will be adequate are different for every waterway. The designer must prepare cross sections of the channel, define the water surface profile for the initial and major design flood, investigate the bed and bank material to determine erosion tendencies, and study the bank slope stability of the channel under flow conditions. Supercritical flow does not normally occur in natural channels, but calculations must be made to assure that the results do not reflect supercritical flow.

2) Artificial Channels: Artificial channels include:

   a) Grass-Lined Channels: Grass-lined channels are the most desirable of the artificial channels. The presence of grass in channels creates turbulence which results in loss of energy and increased flow retardance. Therefore, the designer must give full consideration to sediment deposition and scour, as well as hydraulics.

   b) Concrete-Lined Channels: If the project constraints dictate the use of a concrete channel, such use shall be allowed only upon approval by the City.

   c) Rock-Lined Channels: If the project constraints dictate the use of a riprap or gabion lining, such use shall be allowed only upon approval of the City. Riprap for the purposes of local erosion control is permitted.

   d) Other Channel Linings: The criteria for the design of channels with linings other than grass, rock, or concrete will be dependent on the manufacturer's recommendations for the specific product. The designer will be required to submit the technical data in support of the proposed material. Additional information or calculations may be requested by the City to verify assumptions or design criteria.

4.8.3 Design Standards

The design standards for open-channels cannot be presented in a step-by-step fashion because of the wide range of options available to the designer. Certain planning and conceptual criteria are particularly useful in the preliminary design of a channel. Those criteria which have the greatest effect on the performance and cost of the channel are discussed below. Design submittals shall be in a clear and concise format convenient for review and shall include, but not be limited to,

1) storm runoff computations and mapping,

2) hydraulic design computations, assumptions, references, sketches and drawings,

3) floodplain mapping,

4) and all other pertinent data.

All designed channels shall be such that the Froude Number is not between the range of 0.95 to 1.05. Undulated flow could occur in the prohibited range and cause excessive channel damage.

1) Evaluation of Natural Channels:

The evaluation criteria for natural channels are:

a) The channel and over bank areas shall have adequate capacity for the major storm runoff.

b) Natural channel segments which have a Froude Number greater than 0.95 for any flow shall be protected from erosion.

c) The water surface profiles shall be defined so that the major storm flood plain can be mapped.

d) Filling of the flood fringe reduces valuable channel storage capacity and tends to increase downstream runoff peaks and is subject to the restriction of floodplain regulations.

e) Manning's roughness factors, "n", which are representative of unmaintained or "in need of maintenance" channel conditions shall be used for the analysis of water surface profiles.

f) Manning's roughness factors, "n", which are representative of maintained channel conditions, shall be used to determine velocity limitations.

g) Erosion control structures such as riprap, check drops or check dams, may be required to control flow velocities, including the initial storm runoff.

h) Plan and profile drawings of the major storm floodplain, including flooded limits, shall be prepared. Appropriate allowances for future bridges or culverts, which can raise the water surface profile and cause the floodplain to be extended, shall be included in the analysis.

With most natural waterways, grade control structures should be constructed at regular intervals to decrease the thalweg (point of deepest flow) slope and to control erosion. However, these channels should be left in as near a natural condition as possible. For that reason extensive modifications should not be undertaken unless they are found to be necessary to avoid excessive erosion with subsequent deposition downstream. Also, modification of the channel within the normal high water line may require a US Army Corps of Engineers Section 404 permit.

The usual rules of freeboard depth, curvature, and other guidelines which are applicable to artificial channels do not necessarily apply to natural channels. There are significant advantages which may occur if the designer plans for the overtopping of the channel and localized flooding of adjacent areas, which are laid out and developed for the purpose of being inundated during the major storm runoff. The freeboard criteria can be used to advantage in gauging the adequacy of a natural channel for future changes in runoff.

2) Evaluation of Artificial Channels :

a) Grass-Lined Channels: Key parameters in grass-lined channel design include velocity, slopes, roughness coefficients, depth, freeboard, curvature, cross section shape, and lining materials. Other factors such as water surface profile computation, erosion control, drop structures, and transitions also play an important role. See Table 4-14 for design criteria for grass-lined channels. In addition to the design criteria contained in Table 4-14 grass-lined channels shall also meet the following design criteria.

b) Maintenance/Access Road: Linear access for maintenance and/or construction vehicles and equipment shall be provided for all major drainage ways from public right-of-way or other easements. The "road" may consist of a 12 ft. wide, graded space on one side of the channel.

c) Transitions: Scour potential is amplified by turbulent eddies in the vicinity of rapid changes in channel geometry such as at transitions and bridges. Riprap protection for sub critical transitions (Froude Number 0.8 or less) is selected by increasing the channel velocity by 20%. Since the channel velocity varies through a transition, the maximum velocity in the transition should be used in selecting riprap size after it has been increased by 20%. Protection should extend upstream from the transition entrance at least five (5) feet and extend downstream from the transition exit at least ten (10) feet.

3) Concrete-Lined Channels :

The hydraulic criteria for the design and construction of concrete lined channels is presented in Table 4-14.

4) Rock-Lined Channels :

Design criteria applicable to ordinary and grouted riprap channel linings are presented herein.

a) Channel Coefficient

The Manning's roughness coefficient for hydraulic computations may be estimated for ordinary riprap using Table 4-14. The "n" value is dependent on the predominant rock size.

b) Rock Size and Lining Dimensions:

Rock size lining and dimensions shall be per FHWA HEC-22.

c) Wire Enclosed Rock (Gabions):

The roughness coefficient for gabion linings varies from 0.025 to 0.033 depending on the predominant rock size. An "n" value of 0.028 is recommended based on a rock size of four inches. For gabion linings a larger value of n = 0.032 is recommended due to the larger rock size.

d) Bedding Requirements for Rock-Lined Channels:

Long term stability of riprap and gabion erosion protection is strongly influenced by proper bedding conditions. A large percentage of all riprap failures are directly attributable to bedding failures. Properly designed bedding provides a buffer of intermediate sized material between the channel bed and the riprap to prevent piping of channel particles through the voids in the riprap. Two types of bedding are in common use: 1) a granular bedding filter and 2) filter fabric.

Table 4-14 General Design Guidance for Major and Local Drainage Facilities

Design Item	Criteria for Various Types of Channel Lining					
	Grass Erosive Soils	Grass Nonerosive Soils	Trickle Channel[A]	Low Flow Channel[B]	Riprap	Concrete
Maximum flow velocity (ft/sec)	5	7	*dependent on soils	*dependent on soils	12	18
Minimum flow velocity (ft/sec)	2	2	2	2	2	2
Minimum Manning's n—stability check	0.03	0.03	*See grasslined channels	*See grasslined channels	0.03	0.011
Maximum Manning's n—capacity check	0.035	0.035	*See grasslined channels	*See grasslined channels	0.04	0.013
Maximum Froude number	0.5	0.8	*dependent on soils	*dependent on soils	0.8	N/A
Maximum low-flow zone depth (ft)	N/A	N/A	N/A	3	N/A	N/A
Maximum depth outside low-flow zone (ft)	5.0	5.0	5.0	5.0	N/A	N/A
Minimum channel longitudinal slope (%)	0.2	0.2	0.2	0.2	0.2	N/A
Maximum channel longitudinal slope (%)	0.60	0.60	0.6	0.6	1.00	N/A
Maximum side slope	4H:1V	4H:1V	N/A	2H:1V	2.5H:1V	1.5H:1V5
Maximum centerline radius for a bend[1]	2 x top width	2 x top width	*See grasslined channels	*See grasslined channels	2 x top width	2 x top width
Design Discharge (cfs)[6]	100-year	100-year	2% of 100-year	33% to 50% of 2-year	100-year	100-year
Minimum freeboard[2,3]	1.0 ft[2]	1.0 ft[2]	N/A	N/A	2.0 ft[2]	2.0 ft[4]

[A] Trickle channels are to be used in all channels that either have or have a high probability of having base flow in the future. Trickle channels shall be utilized in drainage rights-of-way or easements that DO NOT have adequate room for recreational activities adjacent to the drainage facility. Trickle channels are either lined with manmade material (concrete) or natural lining (hydric vegetation, rock, etc.) within a larger channel used to minimize oversaturation of drainageways.

[B] Low Flow channels are be used in all channels that carry base flow or are to be utilized within the City's Stormwater Treatment Program. Low Flow channels (preferrably free-meandering) shall be utilized in drainage rights-of-way or easements that DO have adequate room or will be used for recreational activities adjacent to the drainage facility. Low flow channell are typically grass channels within a larger channel. Only limited erosional control is provided that allows the channel to adjust to changes in discharge rates and frequencies overtime.

[1] Use 100 ft if 2 x top width is less than 100 ft. Supercritical channels shall not have horizontal bends.

[2] Suggested freeboard is 2.0 ft to the lowest adjacent habitable structure's lowest floor. Minimum freeboard shall also include velocity head.

[3] Add superelevation to the normal water surface to set freeboard at bends.

[4] For supercritical channels, the first foot of freeboard shall be concrete with the remainder being stabilized earth.

[5] Side slopes may be steeper if designed as a structurally reinforced wall to withstand soil and groundwater forces.

[6] Design Discharge is the undetained fully-developed flow at the point of design if no pre-2007 DBDP exists. If a pre-2007 DBDP exists, DBDP tabulated flows are acceptable.

4.8.4 Water-Surface Profile Analysis

For final design, water-surface profiles must be computed for all channels. The normal depth may be used for the water surface profile if the channel is uniform and continuous with no variance in the channel cross section, slope or channel material. Computation of the water-surface profile shall be presented for all open-channels, utilizing standard backwater analysis, and should consider all losses due to changes in channel velocity, drops, curves, bridge openings, and other obstructions. Computations begin at a known point, and extend in an upstream direction for sub critical flow.

Backwater computation can be made using the methods presented in Open-Channel Hydraulics by Chow. The use of water-surface analysis can be easily programmed on calculators or computers. Many computer programs are also available for computation of water-surface profiles. The most general and widely used program is the HEC-RAS Water-Surface Profiles, developed by the US Army Corps of Engineers, and is the program recommended for flood water profile computations. This program can be used to compute water-surface profiles for both natural and man-made channels.

When designing for bends in open-channels the effects of super elevation and energy losses due to resistance in the bends must be considered in water-surface profile computations. In addition to super elevation on bends, flow separation in the bend creates a backwater effect that must also be considered. More detail on determining these effects may be found in Chow.

4.9 Structures

4.9.1 General Statement

Hydraulic structures are used to guide and control water flow velocities, directions and depths, the elevation and slope of the streambed, the general configuration of the waterway, and its stability and maintenance characteristics.

Careful and thorough hydraulic engineering is justified for hydraulic structures. Consideration of environmental, ecological, and public safety objectives should be integrated with hydraulic engineering design. The proper application of hydraulic structures can reduce initial and future maintenance costs by managing the character of the flow to fit the environment and project needs.

Hydraulic structures include transitions, constrictions, channel drops, low-flow checks, energy dissipaters, bridges, bends, and confluences. Their shape, size, and other features vary widely for different projects, depending upon the discharge and the function to be accomplished. Hydraulic design procedures must govern the final design of all structures.

Urban drainage facilities should not be built if they cannot be properly maintained on a long-term basis. This means that suitable access must be provided, a maintenance plan must be developed and funded, and the drainage facilities must be maintained in accordance with public works standards.

The design of structures must consider safety of maintenance workers and the general public, especially when multiple uses are intended. There are some inherent safety

risks in any waterway that have to be recognized by the public, designers, and government officials. The designer must use a reasonable standard of care for the particular structure being designed or retrofitted that includes evaluation of present or likely future public access and uses.

Aesthetic appearance of structures in urban areas is also important. Structures can be designed with various configurations, different materials, and incorporation of adjacent landscaping to produce a pleasing appearance and good hydraulic function and to enhance the environmental and ecological character of the channel and floodplain.

It is not the intent of this Section to describe all types of hydraulic structures, rather typical hydraulic structures are presented. Additional information can be obtained from technical references.

4.9.2 Energy Dissipaters

Energy dissipaters are often necessary at the end of outfall sewers, culverts or channels. Stilling basins, a type of energy dissipater, are useful at locations where the designer wants to change the flow from supercritical to sub critical downstream from a high- velocity channel or conduit in order to reduce or limit potential erosion.

1) Impact-Type Stilling Basins:

Generally, impact-type stilling basins lends itself to use with pipes. It is an effective stilling device even with deficient tail water where the discharge is relatively small. This basin can be used with either an open chute or a closed conduit structure. The design shown on Figure 4-8 is a US Bureau of Reclamation Basin VI, and has been used for discharges up to 400 cubic feet per second. For larger discharges, multiple basins could be placed side-by-side.

The general arrangement of the basin and the dimensional requirements for various discharges are shown on Figure 4-8 and presented in Table 4-15. This type of basin is subject to local flow turbulences and large dynamic forces which must be considered in the structural design. The structure must be made sufficiently stable to resist sliding due to the impact load on the baffle wall. The entire structure must also resist the severe vibrations inherent in this type of device, and the individual structural members must be sufficiently strong to withstand the large dynamic loads.

Riprap should be provided along the bottom and sides adjacent to the structure to avoid potential local scour of the outlet channel downstream from the end sill when a shallow tail water condition exists. Downstream wing walls placed at 45 degrees may also be effective in reducing scouring tendencies and flow concentrations downstream.

2) Plunge Pools:

A plunge pool consists of a free-falling overflow which drops vertically into a pool. The pool must be heavily protected with large riprap or reinforced concrete. The approximate maximum pool depth is estimated by the following equation:

(Eq. 4-9-1)

$$d_s = 1.32 H_T^{0.225} q^{0.54}$$

d_s = maximum depth of scour below the tail water level, in feet

HT = head difference from the reservoir to tail water levels, in feet

q = unit discharge, in cubic feet per second per foot of stilling basin width

A plunge pool may only be used with a continuous low flow in the channel because of the health and safety hazards which could be created by a stagnant pool.

3) Drop Structures:

The function of drop structures is to convey water from a higher to a lower elevation (i.e., grade control) and to dissipate excess energy resulting from its fall. A channel located in this same terrain would ordinarily be steep enough to cause severe erosion in earth channels or disruptive flow in lined channels. The water can therefore be conveyed through a drop structure designed to safely dissipate the excess energy.

Vertical drops are often the most economical for drops of less than three (3) feet. They can consist of a simple weir above a vertical retaining wall and a splash-pool-type energy dissipater that are combined in a single structure. These structures can be constructed from steel sheet pile, riprap, gabion retaining walls and channel mats, soil cement or reinforced concrete.

Baffled apron drops may be used for nearly any decrease in water-surface elevation where the horizontal distance for a grade drop is relatively short. They are particularly adaptable to the situation where the downstream water-surface elevation may vary because of channel degradation or an uncontrolled water surface. A further discussion on baffled aprons may be found in the Bureau of Reclamation publication Hydraulic Design of Stilling Basins and Energy Dissipaters and the Federal Highway Administration publication Hydraulic Design of Energy Dissipaters for Culverts and Channels.

Rectangular inclined (RI) drops (Figures 4-9 and 4-10) and pipe drops (Figure 4-11) are used where the decrease in elevation is in the range of 3 to 15 feet over a relatively short distance. Usually a pipe drop will be selected for smaller flows and an RI drop will be selected for larger flows. If the drop crosses another waterway or a roadway, it will probably be more economical to use a pipe drop.

4) Chute Structures and Downspouts:

Chute structures and downspouts are commonly used where the drop in elevation is greater than 15 feet. A chute structure/downspout may consist of an inlet, a chute section, an energy dissipater, and an outlet transition. Figure 4-12 shows the relationship of the different parts of the structure. They may also be a CMP downspout with

inlet and an outlet transition. CMP may be used for such structures where soil tests show that the soil is not corrosive. Soil tests must be provided when CMP is proposed as the downspout material. Chutes and downspouts are similar to drops except that they carry the water over longer distances, over flatter slopes, and through greater changes in grade. The inlet portion of the structure transitions the flow from the channel upstream of the structure to the chute structure. The chute section, either pipe or open channel, generally follows the original ground surface and connects to an energy dissipater at the lower end. Stilling pools or baffled outlets are used as energy dissipaters on chute structures. An outlet transition is used when it is necessary to transition the flow between the energy dissipater and the downstream channel.

In a pipe chute, Figure 4-13, the open section is replaced by a pipe. Pipe chutes may be designed to provide a crossing or to allow farming or grazing over the structure.

The decision as to whether to use a chute structure or a series of smaller drops should be based upon a hydraulic and economic study of the two alternatives. Drops should not be so closely spaced as to possibly preclude uniform flow between outlet and inlet ends of consecutive structures, particularly where checks or control notches are not used at the inlets. The danger is that sufficient tail water depths may not exist to produce hydraulic jumps in the pools, and thus "shooting flow" may develop through the series of drops and possibly damage the channel. Also, with drops too closely spaced on a steep slope, problems of excavation and backfill may make construction undesirable or prohibitive. About 200 feet of channel should be the minimum distance between the inlet and outlet ends of consecutive drop structures. The economic study should compare costs of a series of drops versus a single chute structure considering advantages and disadvantages pertinent to the specific conditions. Since the maintenance costs for a series of drops is usually considerably more than for a single chute structure that would perform the same hydraulic function, it is sometimes economically justifiable to spend considerably more in initial costs for a chute structure than for a series of drops. More complete discussions on chute structures are presented in Bureau of Reclamation, Design of Small Canal Structures.

4.9.3 Flow Transitions

A flow transition structure is a change of channel cross section designed to allow for a minimum amount of flow disturbance. Several types of transitions are shown on Figure 4-15. Of these, the abrupt (headwall) and the straight line (wing wall) are the most common.

Special inlet transitions are useful when the conservation of flow energy is essential because of allowable headwater considerations. Section 4.7 includes a discussion on culvert design with improved inlets.

Outlet transitions (expansions) must be considered in the design of all culverts energy dissipaters and channel protection. The standard wing wall apron combinations and expansions downstream of dissipater basins are most common.

4.9.4 Riprap

Placement of riprap is used for preventing or limiting channel bed and bank erosion damage caused by excessive channel flow or surges from energy dissipaters. In particular, placement of riprap on the channel bottom and banks downstream of an energy dissipater structure is required for alleviating possible undermining of the structure.

Experience has shown that a primary reason for riprap failure is placement of undersized individual stones in the maximum size range. Failure has also occurred because of improper engineering design for gradation of riprap, seepage control and/or bedding filter requirements.

Design of riprap should take into account the following parameters:

1) Stone durability
2) Stone density
3) Stone size
4) Stone shape
5) Stone gradation
6) Velocity of flow against the stone
7) Filter bed requirements
8) Channel side slopes
9) Froude Number

The U.S. Bureau of Reclamation has developed a curve, shown as Figure 4-16, which gives the minimum stone size (diameter and weight of a spherical specimen) for a range of bottom velocities up to 17 feet per second.

A well-graded riprap layer contains about 40 percent of the rock pieces smaller than the required size as stable, or more stable, than a single stone of the required size.

Most of the mixture should consist of stones having length, width, and thickness dimensions as nearly equal as practical and of the size shown in Figure 4-16 or larger, or the stones should be of curve weight as shown in Figure 4-16 or more (weight is computed on the basis of 165 pounds per cubic foot) and should not be flat slabs.

The riprap layer should be a minimum of 1-1/2 times or more, as thick as the dimension of the large stones (curve size) and should be placed over a gravel or reverse filter layer.

4.9.5 Design of Riprap Basins

The designer by using Tables 4-16, 4-17 and 4-18 and Figure 4-16 can determine the proper length and width of the basin and the size of rock. The following assumes that a flared end section is to be used at the outlet and the channel water depth is not less than 1/4 of the pipe diameter.

The general geometry of the basin shall be such that the width of the basin at the flared end section outlet shall be three (3) times the pipe diameter, the divergence angle of the rock basin

shall be a 3H:1V ratio of the length to the width, the depth of the rock 1.5 minimum times as thick as the largest stone and the maximum slope of the sides of riprap basin shall be 2H:1V.

A riprap basin shall not be used if the pipe velocity (V_p) is greater than 3.33 times the channel velocity (V_c). The slope of the outlet pipe shall not exceed five (5) percent for a distance of 5D from the outlet.

For Tables 4-16 through 4-18 the following symbols shall be used:

Q = pipe discharge, in cubic feet per second

D = pipe diameter, in feet

d = size of rock in feet (Figure 4-17)

L = length of riprap basin to which velocity is reduced to Vc, in feet

Vc = channel velocity, in feet per second

Vp pipe velocity, in feet per second

4.9.6 Energy Dissipation Basin

The following energy dissipation basin is based on Colorado State University (CSU) tests on a number of basins with different roughness configurations. The effects of the roughness elements are reflected in a drag coefficient which was derived empirically for each roughness configuration. The experimental procedure was to measure depths and velocities at each end of the control and to compute the drag coefficient from the momentum equation by balancing the forces acting on the volume of fluid.

The CSU tests indicated several design limitations which are:

1) Height of roughness element, h, must be between 0.31 and 0.91 of the approach flow average depth, VA.

2) The relative spacing, L/h, between rows of elements, must be either 6 or 12.

The flare divergence, U_e, which is the slope of the tapered portion of the basin is a function of the longitudinal spacing between the element, L, and conduit width, Wo.

$$U_e = 4/7 + (10/7)\, L/W_o \qquad \text{(Eq.4-9-2)}$$

where:

Ue = flare divergence

L = longitudinal spacing between the element, in feet

Wo = conduit width, in feet

The "Basic Design Equation" for the basin is:

(Eq. 4-9-3)

$$\rho V_o Q + C_p \gamma \left(Y_o^2/2 \right) W_o = C_B A_F N \rho V_A^2/2 + \rho V_B Q + \gamma Q^2/(2 V_B^2 W_B)$$

where:

ρ = density of water, 1.94 pound-second per foot

Vo = velocity at conduit outlet, in feet per second

Q = discharge, in cubic feet per second

Cp = momentum correction coefficient = 0.7

ϒ = unit weight of water, 62.4 pounds per cubic feet

Yo = depth of water at conduit outlet, in feet

Wo= conduit width, in feet

C_B = basin drag coefficient

A_F = frontal area of one full roughness element, in square feet

N = total number of roughness elements in the basin

V_A = approach velocity of 2Wo downstream of conduit outlet, in feet per second

V_B = exit velocity downstream of last row of roughness element, in feet per second

W_B = basin width downstream of the last row of roughness element, in feet

This equation and the corresponding basin design is for basins with slopes less than 10 percent.

2) Design Discussion

The initial step is to compute the flow parameters at the conduit outlet. Compute the velocity **(V_o),** depth (Y_o) and Froude Number (Fr).

Select a trial basin configuration from Figure 4-17 based on the W_B/Wp expansion ratio which best matches the site geometry or satisfies other constraints.

Determine the flow condition V_A and Y_A at the approach to the roughness element field located two conduit widths downstream.

$V_A/V_o = 1.65 = 0.3$ Fr; rectangular conduit (Eq. 4-9-4)

$V_A/V_o = 1.65 - 0.45\ [Q/(g\ W_o^5)^{1/2}]$, round conduit (Eq. 4-9-5)

For basins with expansion ratios (W_B/Wo) between 2 and 4, compute Y_A based on the actual width of the basin, W_B. For basins with expansion ratios between 4 and 8 use the following:

$Y_A/Y_o = 0.19 + (Fr - 1)\ 0.145$; rectangular conduit (Eq. 4-9-6)

$Y_A/Y_o = 0.21 + (Fr - 1)\ 0.19$; round conduit (Eq. 4-9-7)

Select the trial roughness height to depth ratio (h/Y_A) from Figure 4-17 and determine:

a) Roughness heights (h)

b) Longitudinal spacing between rows of elements (L)

c) Width of basin (W_B)

d) Number of rows (N_r)

e) Number of roughness elements (N)

f) Roughness element width (W_1)

g) Flare divergence (U_e)

h) Basin drag coefficient (C n)

i) Frontal area of roughness element ($A_f = W_1h$)

j) Momentum correction coefficient (Cp = 0.7)

Total basin length is $Li = 2W_o + LN_r$. This provides a length of basin downstream of the last row of roughness elements equal to the length between rows, L.

Solve the "Basic Design Equation" for C_BA_fN and compare to C_BA_fN computed from C_B, A_f, and N values from Figure 4-17. The C_BA_fN computation from Figure 4-17 should be equal to or larger than the value obtained from the "Basic Design Equation". If the value is less, select a new roughness configuration from Figure 4-17 and recompute C_BA_fN.

The W_1/h ratio must be between two (2) and eight (8) and at least half of the rows of elements should have an element near the wall to prevent high velocity jets from traversing the basic length. Alternate rows are staggered.

Riprap should be used for a minimum of 10 feet downstream of the basin to protect the disturbed channel.

The vertical anchor forces located at the center of the roughness element to resist overturning can be determined as follows:

$$F_A = h\, F_D/2\, (L_c) = 0.97\, (h/L_c)A_fV_A^2 \qquad \text{(Eq. 4-9-8)}$$

where:

F_A = total vertical force on element, in pounds

h = height of roughness element, in feet

F_D = drag force on vertical element, in pounds

Lc = distance from the downstream edge of the roughness element to the centroid of the anchor (s), in feet

A_f = frontal area of roughness element, in square feet

V_A = approach velocity acting on roughness element, in feet per second

The designer needs to check shear, soils strengths and other parameters of the roughness element and restraining medium.

4.9.7 Velocity Reduction Combinations

The designer may reduce the cost and/or size of a velocity reduction (energy dissipation) structure by utilizing combinations of several structures. Combining types of structures may also allow a more efficient and more site adaptable structure.

Alternate designs require the designer to determine which of the combinations is the most economical design and is site adaptable. This process is an iterative process and will require familiarity with the site and all the parameters which the design must meet.

4.9.8 Scour

Basically, scour is the net result of an imbalance between the capacity of the flow to transport sediment out of an area and the rate of supply of sediment to that area. At a bridge crossing, for instance, the area of interest is the immediate vicinity of the bridge foundation, the piers and abutments. The imbalance of this capacity and supply can arise from a variety of causes which can be generally categorized as 1) those characteristics of the stream itself, and 2) those due to the modification of the flow by the bridge piers and abutments.

Because of the overall complexity of the hydrodynamic forces existing in a natural stream channel, the detailed flow pattern in an unobstructed stream cannot be predicted over time with great accuracy. Reasonable estimates can be made based on observations along reaches of similar streams, and in some cases, actual records and measurements for the particular reach of the stream under investigation can be performed.

Scour which occurs because of modification of the flow patterns by a bridge crossing can be further divided into two distinct types of scour depending upon whether or not sediment is supplied to the scour hole. Equilibrium is attained when a scour hole is enlarged to a size where the capacity to remove material from the scour hole is balanced by the rate at which sediment is supplied to the scour hole. During floods, a scour hole located in the main channel will be supplied with sediment at a rate characteristic of the stream. Ignoring the complexities of material stratification that may exist below the stream bed, the material supplied will be essentially the same as the material removed.

If no sediment is supplied to the scour hole, equilibrium is not attained until the configuration of the bed is such that the scouring capacity of the flow is zero. This condition is most likely to occur in over bank areas where vegetation reduces flow velocities, causing the coarser material to drop out of suspension, resulting in a greater degree of scour in over bank areas than would otherwise occur in the main channel.

4.10 Storage

4.10.1 General Statement

On-site detention of runoff is an alternative to other methods of urban stormwater management. Storage, which involves collecting excess runoff before it enters the main drainage system, can often be an effective and economical means of reducing peak flow rates and mitigating problems of flooding, pollution, soil erosion, and siltation.

Detention facilities will be used to lessen the impact of peak flows on down-stream property, and for the improvement of water quality. Facilities that retain stormwater runoff for an extended period of

time will not be permitted, unless identified in an approved Drainage Basin Design Plan. Design of retention facilities is beyond the scope of this Manual.

State law says that a land owner can drain his or her property by artificially accelerating the drainage onto lower land following the natural drainage course unless water is collected or released in unusual or unnatural quantities. State law also says that a landowner can reasonably alter flow of runoff on the land as long as the resultant downstream harm is not unreasonable.

The design of a project site drainage system should not only take into account the runoff from upstream sites, recognizing their urban development potential, but also should evaluate the downstream conveyance system leading to established drainage facilities to ensure that it has sufficient capacity to accept design discharges without adverse backwater or downstream impacts such as flooding, stream bank erosion, and sediment deposition. If downstream conveyance is not in place to handle increased flows, the landowner must make adequate on site detention to limit flows.

Peak flows should be limited to predevelopment levels, ie. natural for undeveloped land and immediate pre-development for partially developed land, for the 2, 10, and 100-yr runoff event unless the design engineer provides a drainage analysis showing the downstream conveyance system can handle larger post development flows. This would require that storage facility outlet structures be designed to meter the outflows for the 2, 10, and 100-yr runoff event.

The drainage basin design plans which have been adopted by Council provide for only major drainages. Localized or minor drainage is required to be evaluated on a site by site basis.

The purpose of this Section is to introduce the design procedures and methods of application of on-site detention facilities. The design of dams is beyond the scope of this Manual, and the designer should solicit proper technical references in the design of such a facility.

4.10.2 On-Site Storage

It is with on-site storage that the greatest potential exists for reducing the cost of urban drainage. Types of on-site storage includes but is not limited to:

- Rooftop Ponding
- Parking Lots
- Recreational Areas
- Property Line Swales
- Road Embankments
- On-Site Ponds
- Sub-surface Storage
- Combinations of the Above

4.10.3 Design Criteria

It is important for an engineer/developer to know when a facility comes under the design criteria of a dam, as defined by the state. The design of a dam is beyond the scope of the Manual.

1) Dam Facility

A dam facility is as defined in the Administrative Rules of South Dakota (ARSD).

2) Design Storm

A detention facility shall be designed to control the peak rates for the 2 year, 10 year and 100 year events to existing conditions. A minimum of one (1) foot of freeboard shall be added to the 100 year design water surface elevation. It is the responsibility of the designer to determine if additional freeboard is necessary. The City reserves the right to require additional freeboard if the City deems it necessary. Adding the additional freeboard requirement may create a dam as defined by ARSD. The facility must then be modified or designed as per state dam criteria.

4.10.4 Detention Facility

A detention facility shall consist of any artificial barrier and associated outlet works intended to detain water. A detention facility that meets the definition of a dam in the ARSD shall be designed in accordance with the ARSD. Peak flows shall be limited to predevelopment levels for the 2, 10, and 100 year event unless the design engineer provides a drainage analysis showing the downstream conveyance system can handle larger post development flows. Minimum design standards for detention facilities are as follows:

1) Minimum bottom slopes – pond slopes shall be designed with a 0.5% minimum longitudinal and a 2.0% minimum cross slope.

2) Side slopes – graded facility side slopes shall be 4H to 1V, maximum. Graded side slopes greater than 4H to 1V must be approved by the City Engineer and, if approved, protected from erosion and instability and not require routine maintenance.

3) Trickle channels – facilities shall have a trickle channel with a capacity of 2% of the 100 year design storm event inflow to the pond and a minimum slope of 0.2%.

4) Freeboard – detention facilities shall be designed with a minimum freeboard of one foot above the emergency spillway water surface elevation or one foot above the water surface elevation during 100 year storm event spill over the emergency spillway, which ever is greater.

5) Inlets – points of inflow to the facility shall be protected to prevent erosion. The design of protection measures shall be based on no storage in the pond.

6) Groundwater – the presence of groundwater within detention facilities must be addressed in design so that standing water is avoided and drainage structures are adequately protected.

4.10.5 Principal Outlet Works

Reinforced concrete structures shall be utilized for the principal outlets. The minimum outlet pipe diameter shall be 18 inches. The principal outlet shall be able to completely drain the detention facility within 72 hours of the end of the 100-year storm event by gravity flow through the principal outlets. If a riser is used, a drawdown pipe shall be installed to completely drain the facility. The minimum riser pipe diameter shall be 18 inches.

The formation of vortices can significantly reduce the discharge for a given headwater because of energy losses. The potential for this shall be evaluated during design and anti-vortex devices installed, if necessary.

Depending on the geometry of the outlet structure (either drop-inlet riser or hood-inlet pipe) discharge for various headwater depths can be controlled by the inlet crest (weir control), the riser or barrel opening (orifice control), or the riser or barrel pipe (pipe control). Each of these flow controls shall be evaluated when determining the rating curve of the principal outlet.

4.10.6 Emergency Spillways

The designer is responsible to determine if an emergency spillway or a spillway feature is needed for an embankment type detention facility. The City may require the designer to evaluate a more stringent design requirement including a breach analysis if there is a potential for loss of life.

The position, profile, and length of the spillway are influenced by geologic and topographic features of the site. The cross section dimensions are governed by hydraulic elements and are determined by acceptable reservoir routing of the design storm. Discharge from the spillway(s) shall be directed to the main channel without causing erosion along the downstream toe of the dam. Spillways proposed for the protection of earthen embankments shall be in full cut, if possible, to avoid flows against constructed fill. The side slopes of the excavated channel in earth shall be no steeper than 4H:1V for ease of maintenance. Where the site limitations prevent a full channel cut, a wing dike shall be provided to direct spillway flows away from the downstream toe of the dam. Ready access to the emergency spillway system shall also be provided.

The configuration of the entrance channel from the reservoir to the control section of the spillway shall be a smooth transition to avoid turbulent flow over the spillway crest. The outlet channel of the spillway shall convey flow to the channel below the structure with a minimum of erosion. The slope of the exit channel usually follows the configuration of the abutment. In cases of highly erodible soils it may be necessary to use other means of protection such as riprap, grouted rock or concrete paving to form the exit channel. Specially adapted grasses can be used to provide a stabilizing effect and reduce erosion in the exit channel. As an alternative, detention storage can be increased to reduce the frequency and/or duration of use of the spillway and thereby reduce erosion problems.

4.10.7 Hydraulic Design Methods

The acceptable methods for predicting the volume of runoff over time and the peak flow are the Modified Rational Method and HEC-HMS or methods identified in Chapter 4.2. Use of CUP-SWIM shall be limited to making predictions for changes in existing basins where the basin has not yet been remodeled using HEC-HMS. See chaper 4.2.

4.11 Irrigation

4.11.1 General Statement

The combined use of irrigation facilities for stormwater drainage is prohibited without the permission of the owner of such facilities and the City of Rapid City.

Urbanization of undeveloped areas could impact existing irrigation systems in one of three ways:

1) Development could disrupt the source of supply by reducing the quantity of water flowing in channels used for irrigation supplies or by reducing the quality of water used for irrigation.

2) Development could disrupt irrigation water delivery by adversely impacting the geometry of channels used for irrigation, thus reducing the hydraulic efficiency of the irrigation head gates.

3) Development could disrupt irrigation water delivery by increasing the flow in existing ditches, resulting in ditch failure and downstream flooding.

4.11.2 Use of Irrigation Channels

The use of irrigation facilities for stormwater conveyance generally is not acceptable. Runoff from urban development shall be directed into historic or natural drainage ways, avoiding discharge into irrigation facilities, except as required by water rights or as shown in an approved Drainage Basin Design Plan and with the permission of the owners of such facilities and the City.

If the designer proposes to use an existing, manmade canal to convey stormwater runoff from a developing area, the following information must be provided to the City:

1) Documentation of consultation between the designer and ditch company indicating the intent of the designer, the extent of the affected reach, and the magnitude of expected impacts.

2) Maps showing the affected canal reach, accompanied by engineering drawings of any improvements made to the canal as part of the stormwater management system.

3) A narrative report describing the proposed improvements supported by the following information:

   a) A description of the alternatives considered, including the design criteria used to evaluate the alternatives.

   b) Additional design criteria, if any, required by the ditch company.

   c) Technical computations indicating:

      i) Existing canal capacity, including base flow and/or irrigation flows and residual capacity

      ii) Ultimate capacity after improvements

      iii) Design storm hydrographs

      iv) Areas flooded under existing and ultimate conditions

d) An environmental appraisal of the proposed action which describes as a minimum

i) Temporary and permanent measures to control the production of sediments

ii) Wetlands and navigable streams affected by the proposed action.Wetlands are regulated by Section 404 of the Clean Water Act and navigable streams are regulated by Section 10 of the Rivers and Harbors Act of 1899.

iii) Expected impacts to water quality

e) A listing of anticipated costs, including alternatives, for capital improvements and annual operation and maintenance.

f) A description of the expected maintenance requirements, together with an annual maintenance schedule, including the source of funds to be used for maintenance activities.

g) Downstream channel is not filled in. (i.e. drainage easement)

4) Resolution(s) made and executed by the ditch company (or companies, if necessary) allowing the use of the affected canal for purposes of stormwater management.

End of Section

Figure 4-1
Gutter and Pavement Flow Patterns

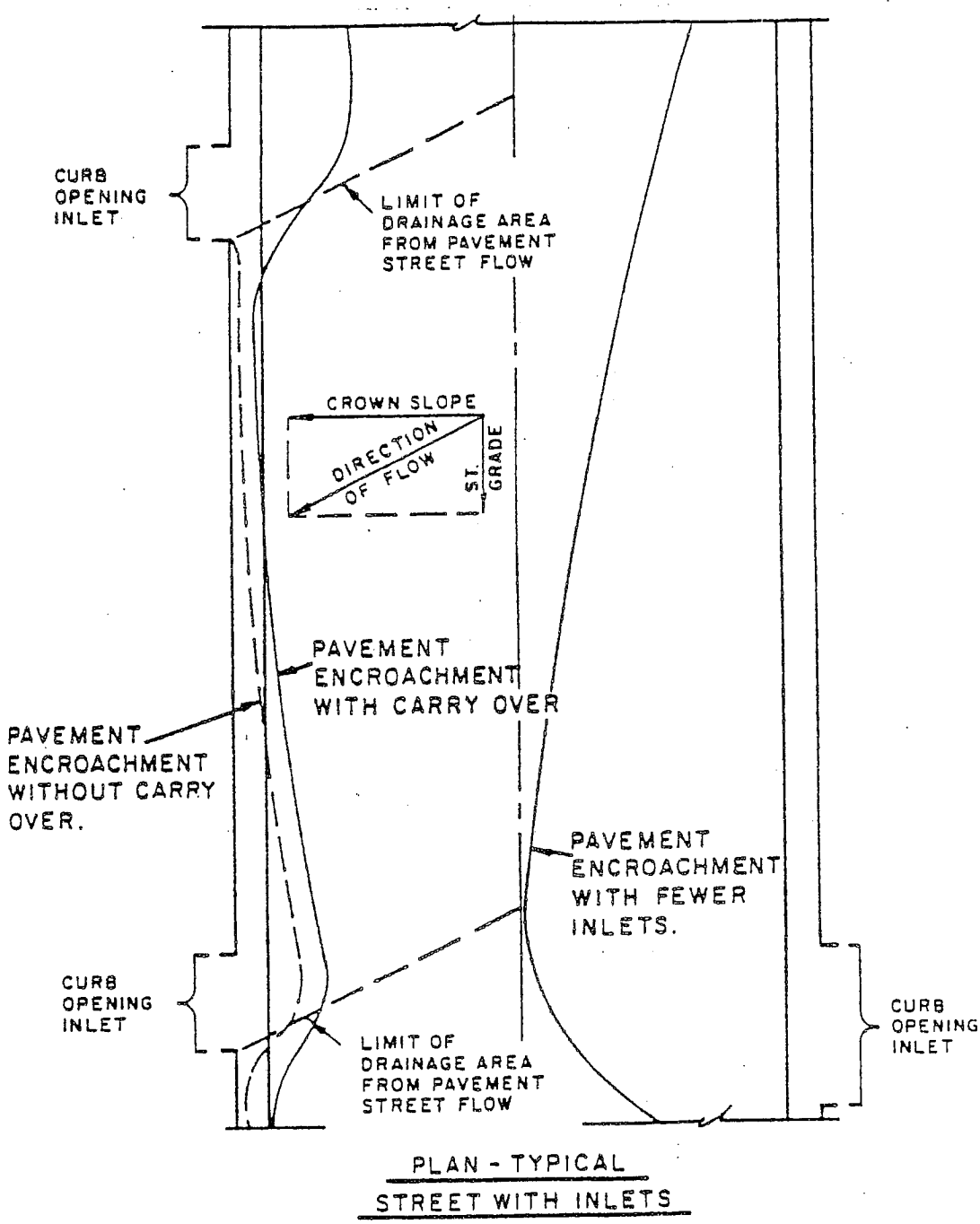

11-15-68
Denver Regional Council of Governments

Figure 4-2
Flow in Triangular Gutter Section

(Source: US Department of Transportation, Hydraulic Engineering Circular No 12, Drainage of Highway Pavements, March 1984)

$$Q = \frac{0.56}{n} S_X^{1.67} S^{0.5} T^{2.67}$$

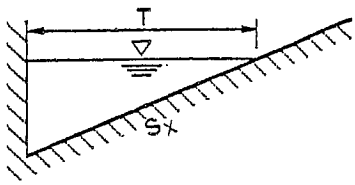

Example:

Given: $n = 0.016$
$S_X = 0.03$
$S = 0.04$
$T = 6$ Ft.

Find: $Q = 2.4$ cfs
$Qn = 0.038$ cfs

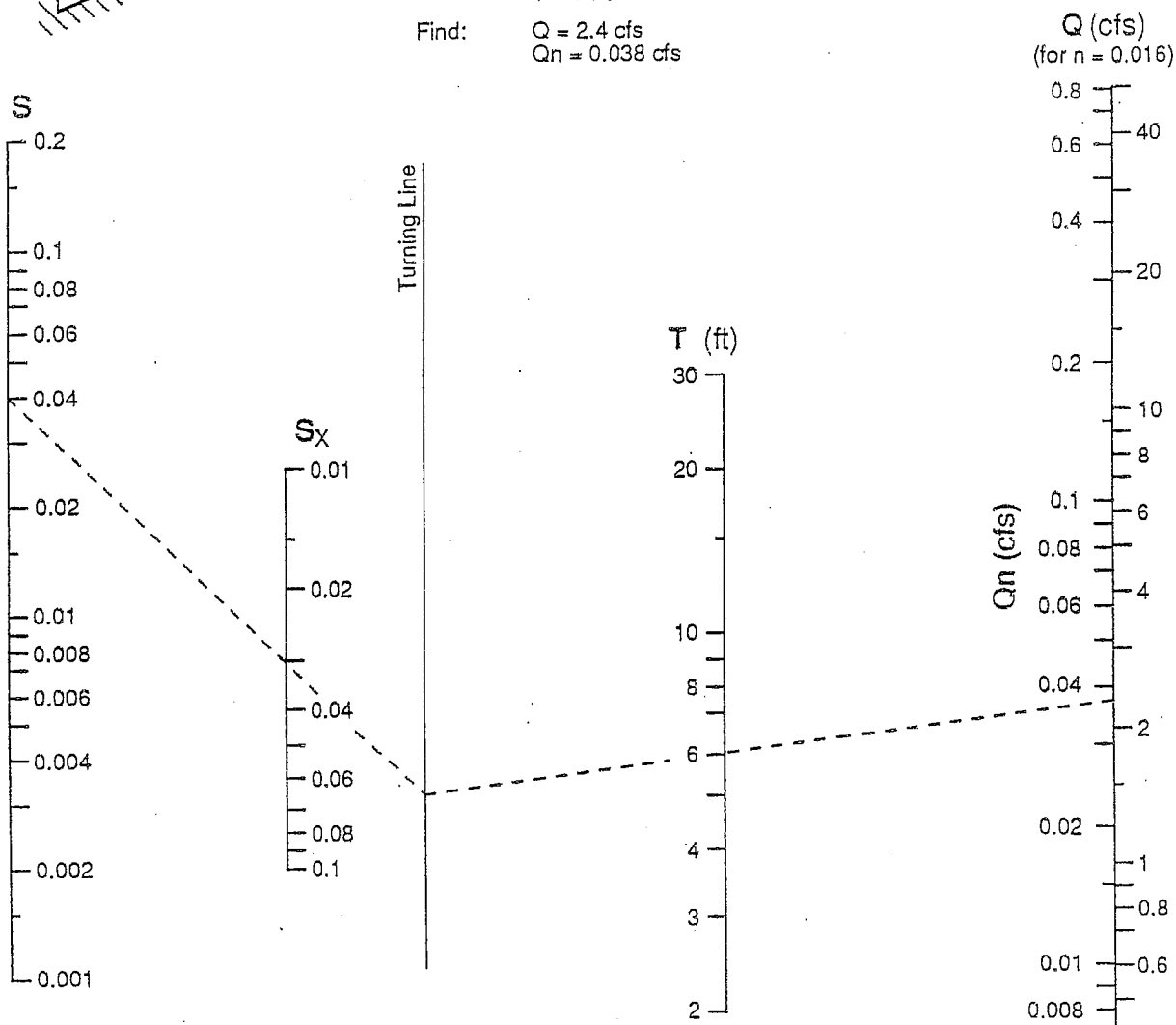

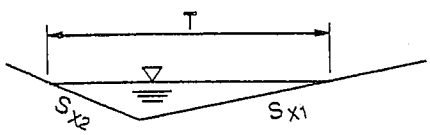

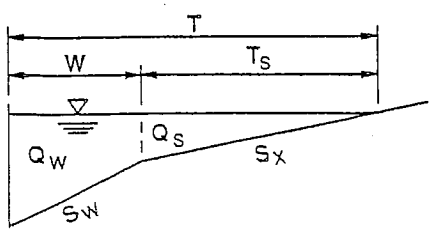

1. For V-Shape, use the nomograph with $S_X = S_{X1}S_{X2} / (S_{X1} + S_{X2})$
2. To determine discharge in gutter with composite cross slopes, find Q_S using T_S and S_X. Then use Figure 3-3 to find E_O. The total discharge is $Q = Q_S / (1 - E_O)$, and $Q_W = Q - Q_S$.

Figure 4-3
Ratio of Frontal Flow to Total gutter Flow (Eo)
(Source: US Department of Transportation, Hydraulic Engineering Circular No. 12, Drainage of Highway Pavements, March 1984)

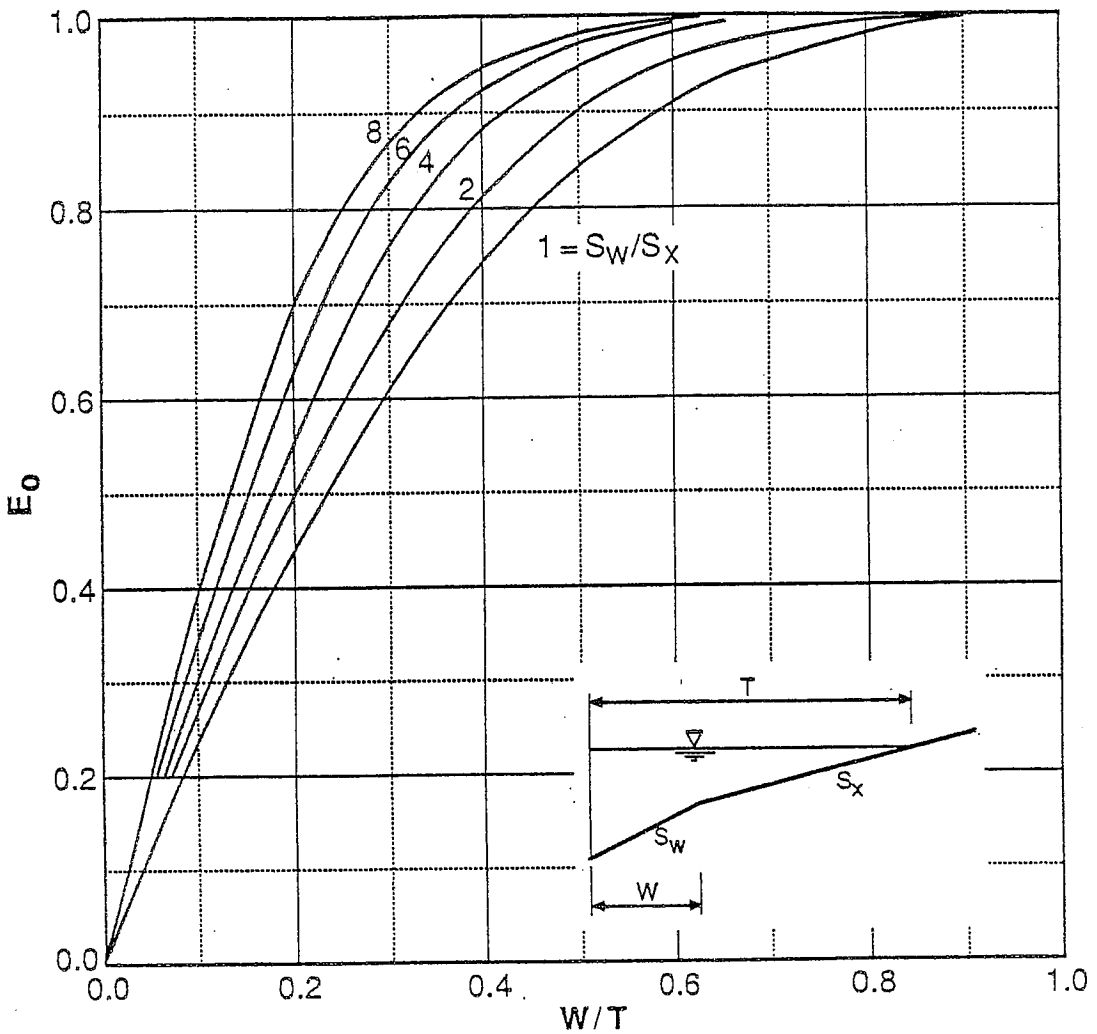

Figure 4-4
Conveyance-Spread Curves for a Composite Gutter Section in Rapid City, SD

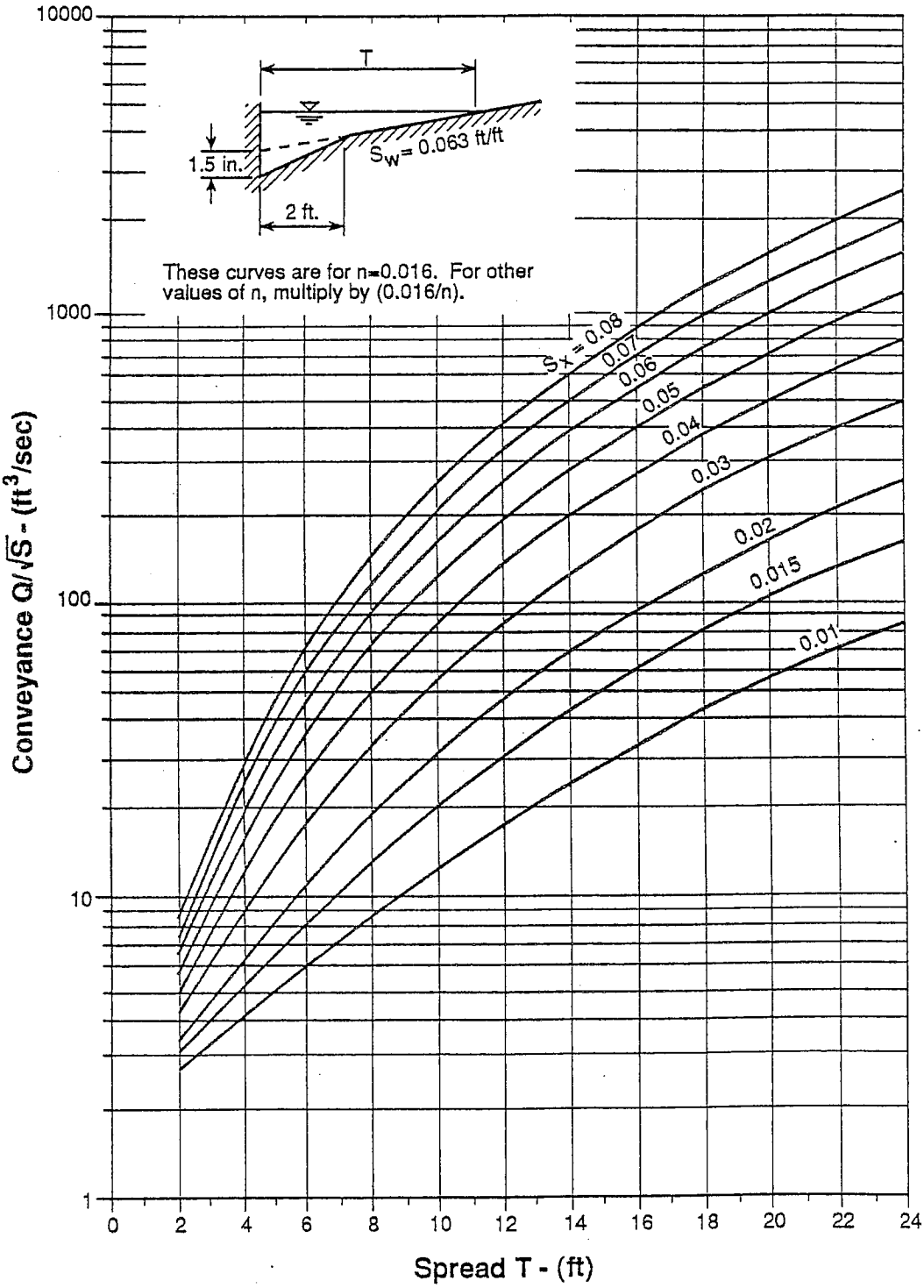

Figure 4-5
Velocity in Triangular Gutter Sections
(Source: US Department of Transportation, Hydraulic Engineering Circular No. 12, Drainage of Highway Pavements, March 1984)

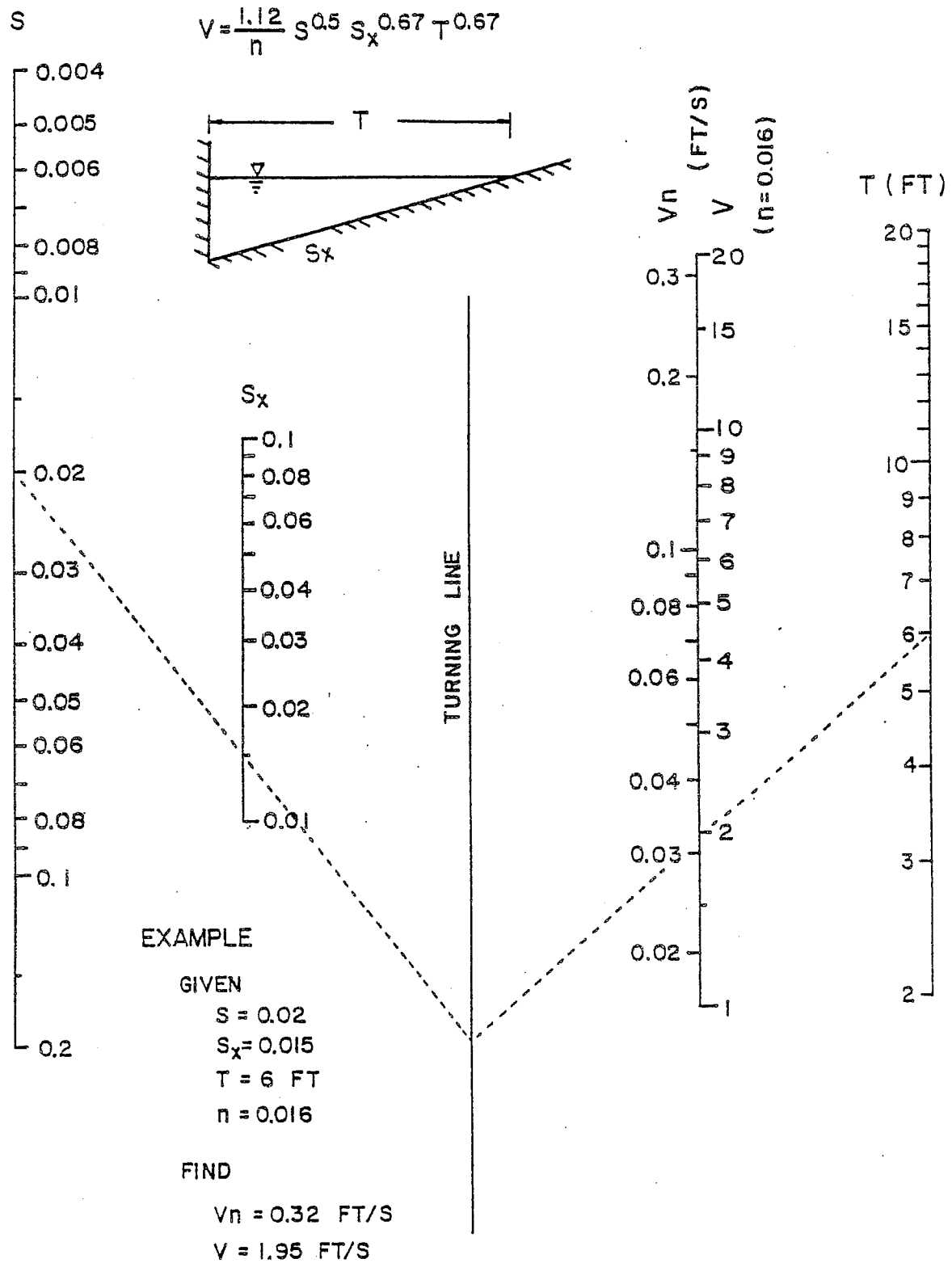

Figure 4-6

Minor Head Losses Due to Turbulence at Structures PW013112-29

(Source: City of Waco, Texas, Storm Drainage Criteria Manual)

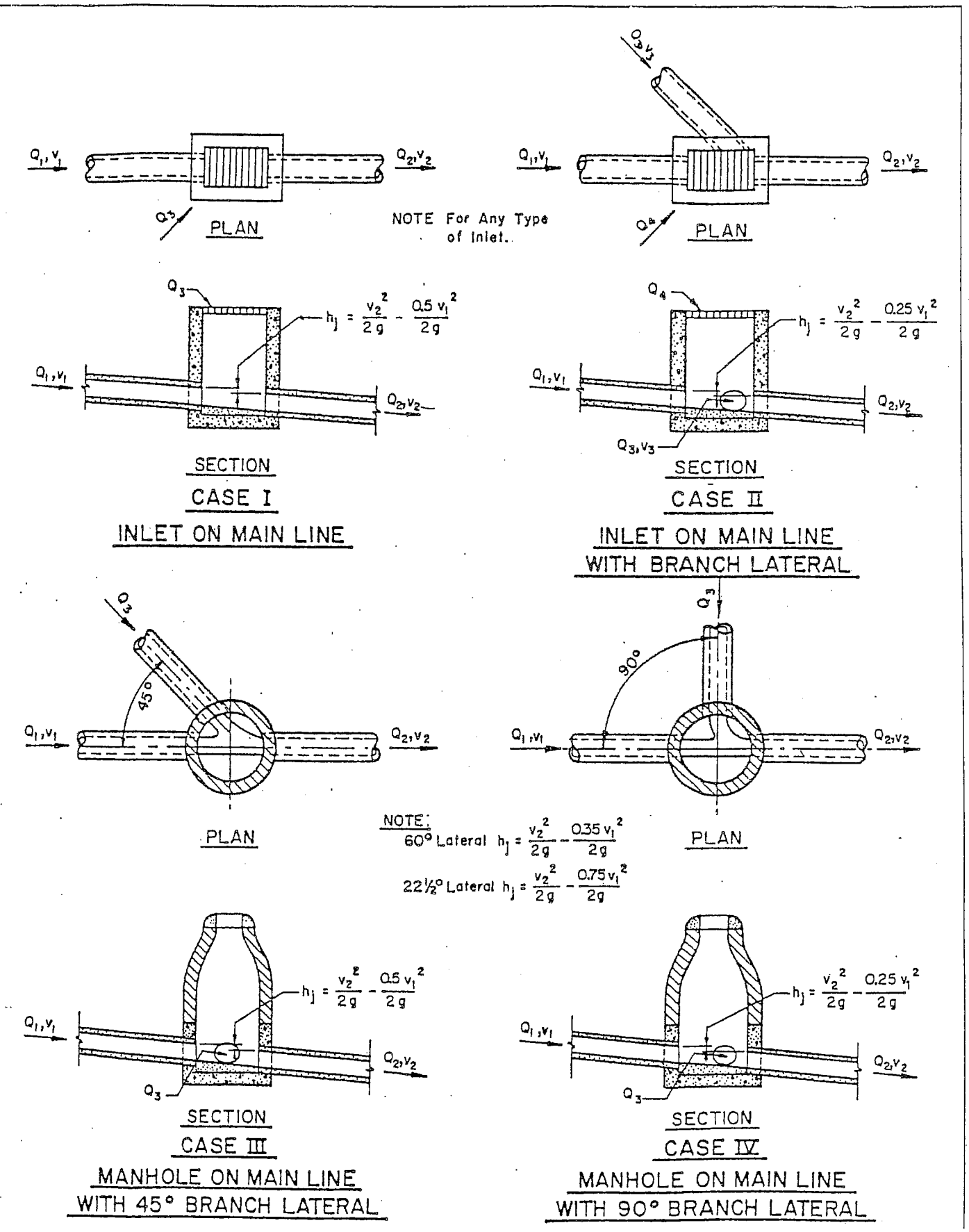

Figure 4-7

Minor Head Losses Due to Turbulence at Structures

(Source: City of Waco, Texas, Storm Drainage Criteria Manual)

PW013112-29

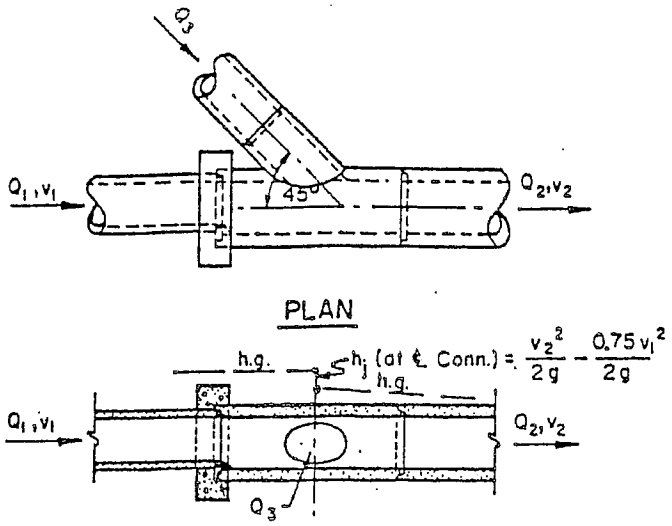

CASE V
45° WYE CONNECTION OR CUT IN

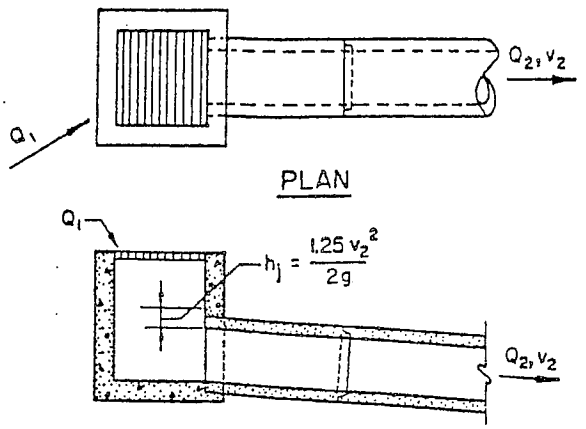

CASE VI
INLET OR MANHOLE AT BEGINNING OF LINE

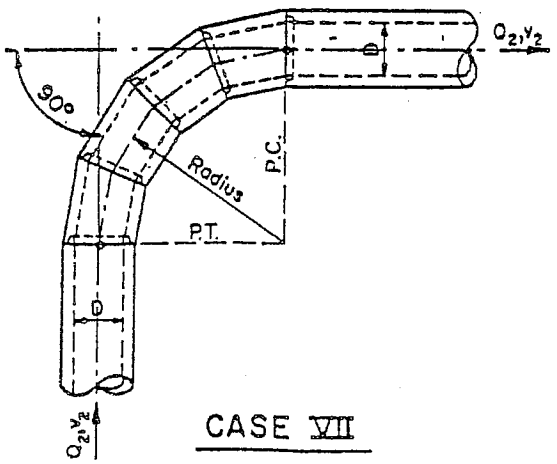

CASE VII
CONDUIT ON 90° CURVES*

NOTE: Head loss applied at P.C. for length of curve.

Radius = Dia. of Pipe $h_j = 0.50 \frac{v_2^2}{2g}$

Radius = (2-8) Dia. of Pipe $h_j = 0.25 \frac{v_2^2}{2g}$

Radius = (8-20) Dia. of Pipe $h_j = 0.40 \frac{v_2^2}{2g}$

Radius = Greater than 20 Dia. of Pipe $h_j = 0$

*When curves other than 90° are used, apply the following factors to 90° curves.
60° curve 85%
45° curve 70%
22 ½° curve 40%

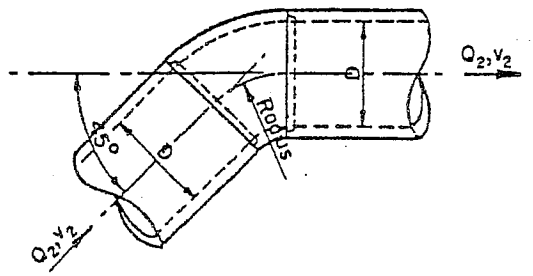

CASE VIII
BENDS WHERE RADIUS IS EQUAL TO DIAMETER OF PIPE

NOTE: Head loss applied at begining of bend

90° Bend $h_j = 0.50 \frac{v_2^2}{2g}$

60° Bend $h_j = 0.43 \frac{v_2^2}{2g}$

45° Bend $h_j = 0.35 \frac{v_2^2}{2g}$

22 ½° Bend $h_j = 0.20 \frac{v_2^2}{2g}$

Figure 4-8
Dimensional Criteria Impact Type Energy Dissipator
(Source: US Bureau of Reclamation, Design of Small Dams, 1987; Hydraulic Design of Stilling Basins & Energy Dissipators, 1984)

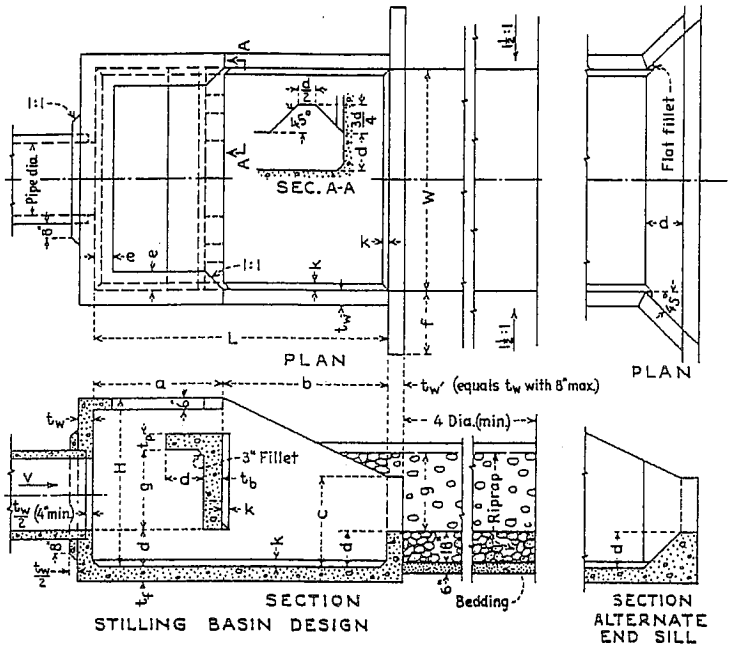

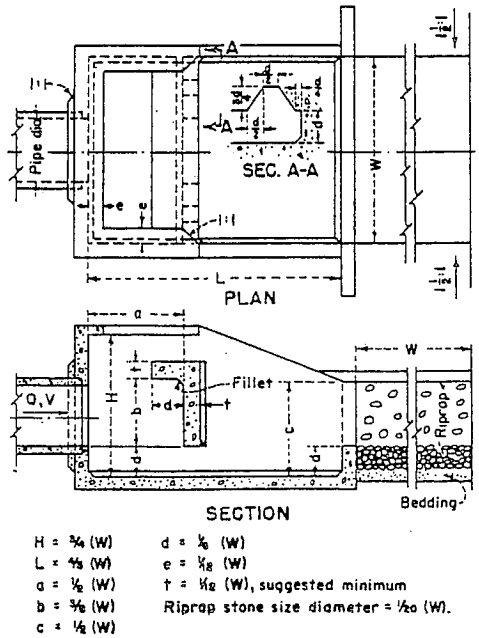

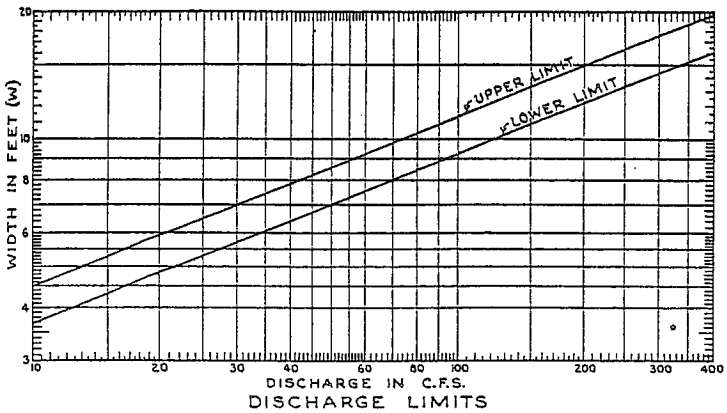

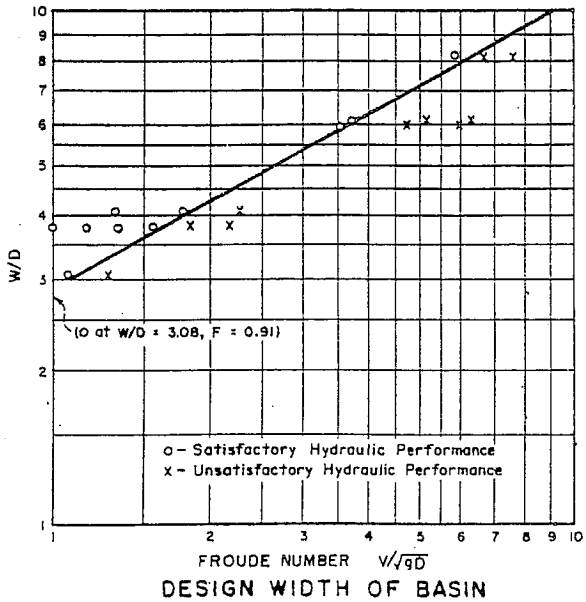

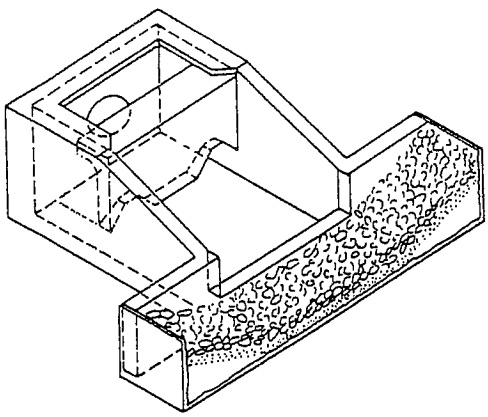

NOTES:
W is the inside width of the basin.
D represents the depth of flow entering the basin and is the square root of the flow area.
V is the velocity of the incoming flow.

Table 4-15
Stilling Basin Dimensions (Basin VI)

Suggested pipe size [1]		Max dis-charge Q	Feet and inches										Inches					
Dia in.	Area (sq ft)		W	H	L	a	b	c	d	e	f	g	t_w	t_f	t_b	t_p	K	Suggested riprap size
(1)	(2)	(3)	(4)	(5)	(6)	(7)	(8)	(9)	(10)	(11)	(12)	(13)	(14)	(15)	(16)	(17)	(18)	(19)
18	1.77	[2] 21	5-6	4-3	7-4	3-3	4-1	2-4	0-11	0-6	1-6	2-1	6	6½	6	6	3	4.0
24	3.14	38	6-9	5-3	9-0	3-11	5-1	2-10	1-2	0-6	2-0	2-6	6	6½	6	6	3	7.0
30	4.91	59	8-0	6-3	10-8	4-7	6-1	3-4	1-4	0-8	2-6	3-0	6	6½	7	7	3	8.5
36	7.07	85	9-3	7-3	12-4	5-3	7-1	3-10	1-7	0-8	3-0	3-6	7	7½	8	8	3	9.0
42	9.62	115	10-6	8-0	14-0	6-0	8-0	4-5	1-9	0-10	3-0	3-11	8	8½	9	8	4	9.5
48	12.57	151	11-9	9-0	15-8	6-9	8-11	4-11	2-0	0-10	3-0	4-5	9	9½	10	8	4	10.5
54	15.90	191	13-0	9-9	17-4	7-4	10-0	5-5	2-2	1-0	3-0	4-11	10	10½	10	8	4	12.0
60	19.63	236	14-3	10-9	19-0	8-0	11-0	5-11	2-5	1-0	3-0	5-4	11	11½	11	8	6	13.0
72	28.27	339	16-6	12-3	22-0	9-3	12-9	6-11	2-9	1-3	3-0	6-2	12	12½	12	8	6	14.0

[1] Suggested pipe will run full when velocity is 12 feet per second or half full when velocity is 24 feet per second. Size may be modified for other velocities by Q = AV, but relation between Q and basin dimensions shown must be maintained.

[2] For discharges less than 21 second-feet, obtain basin width from curve of Fig. 8-1. Other dimensions proportional to W; $H = \frac{3W}{4}$, $L = \frac{4W}{3}$, $d = \frac{W}{6}$, etc.

NOT TO SCALE

PW013112-29

Figure 4-9
Rectangular Inclined Drop (USBR Type 1)
(Source: US Bureau of Reclamation, Design of Small Canal Structures, 1987)

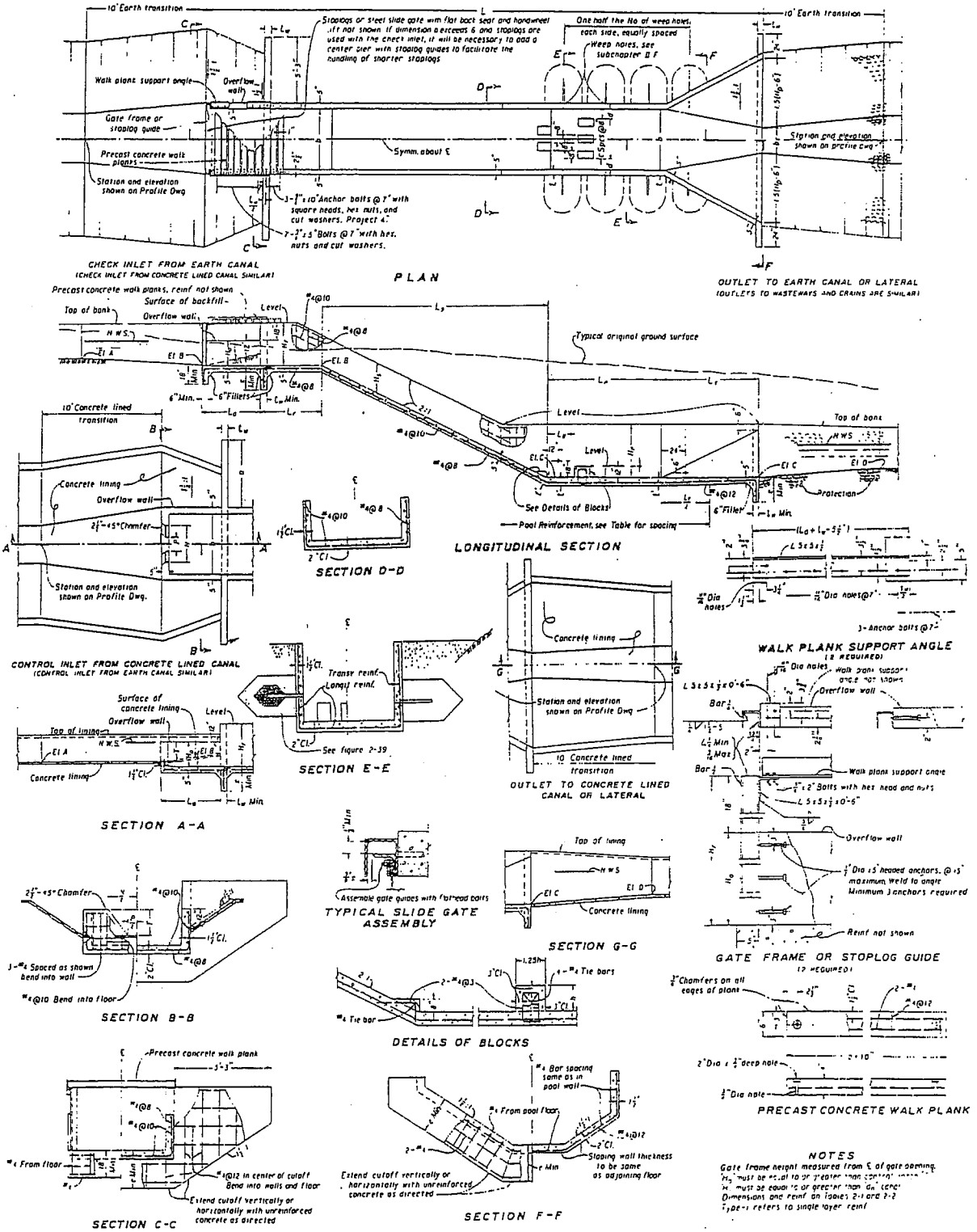

Figure 4-10
Rectangular Inclined Drop (USBR Type 2)
(Source: US Bureau of Reclamation, Design of Small Canal Structures, 1987)

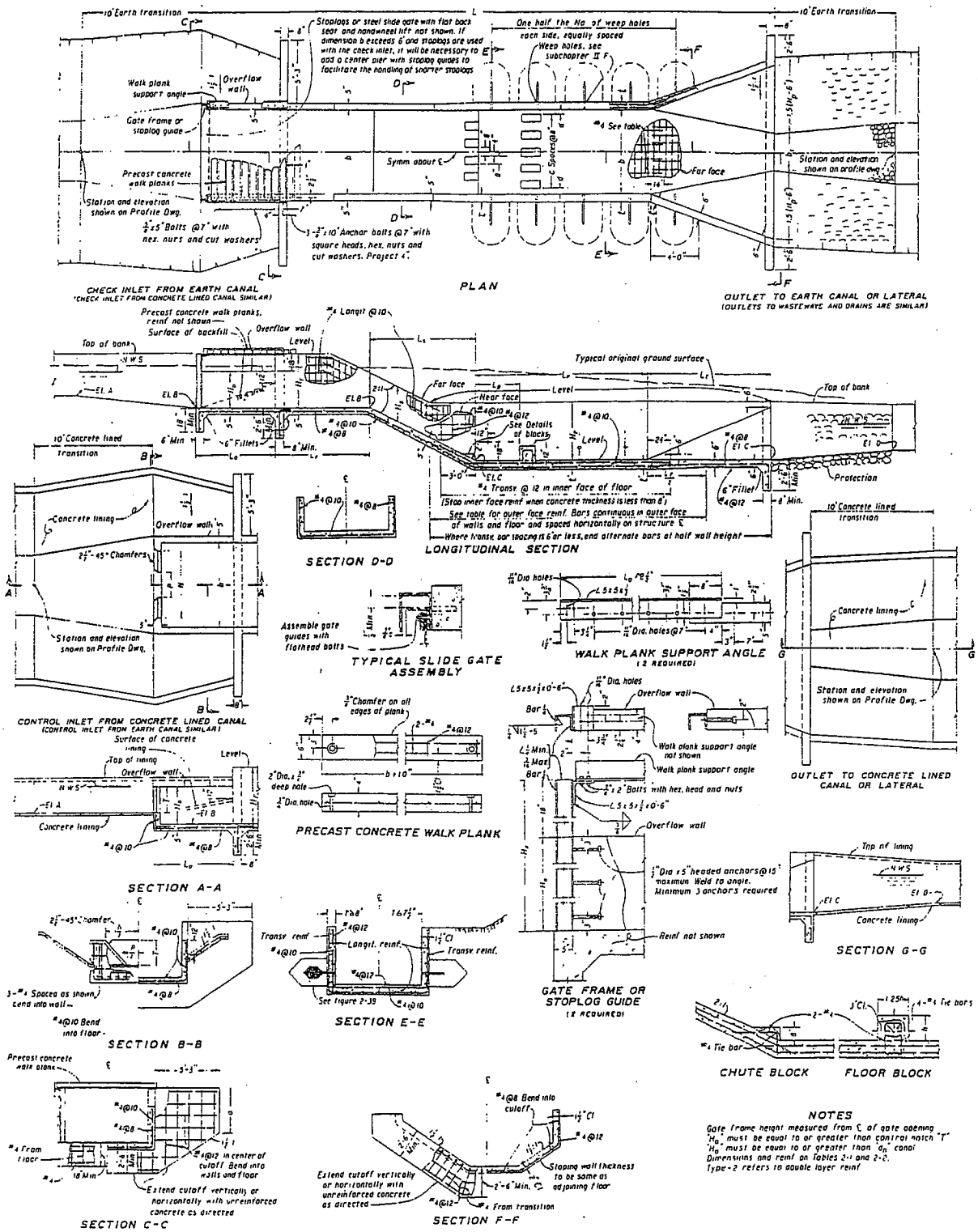

Figure 4-11
Control and Pipe Inlets
(Source: US Bureau of Reclamation, Design of Small Canal Structures, 1987)

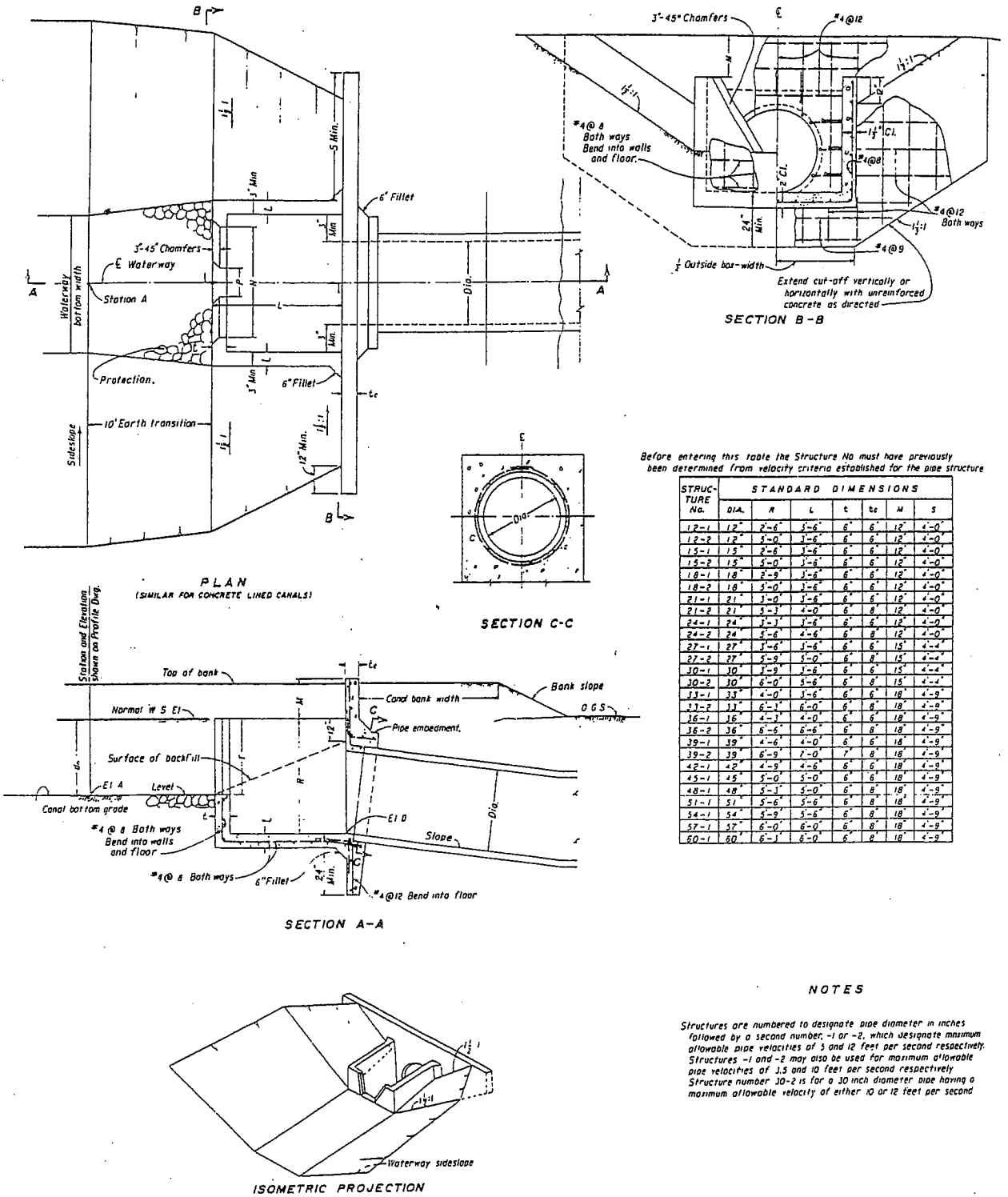

Before entering this table the Structure No must have previously been determined from velocity criteria established for the pipe structure

STRUCTURE No.	STANDARD DIMENSIONS						
	DIA.	R	L	t	tc	H	S
12-1	12"	2'-6"	3'-6"	6"	6"	12"	4'-0"
12-2	12"	5'-0"	3'-6"	6"	6"	12"	4'-0"
15-1	15"	2'-6"	3'-6"	6"	6"	12"	4'-0"
15-2	15"	5'-0"	3'-6"	6"	6"	12"	4'-0"
18-1	18"	2'-9"	3'-6"	6"	6"	12"	4'-0"
18-2	18"	5'-0"	3'-6"	6"	6"	12"	4'-0"
21-1	21"	3'-0"	3'-6"	6"	6"	12"	4'-0"
21-2	21"	5'-3"	4'-0"	6"	8"	12"	4'-0"
24-1	24"	3'-3"	3'-6"	6"	6"	12"	4'-0"
24-2	24"	5'-6"	4'-6"	6"	8"	12"	4'-0"
27-1	27"	3'-6"	3'-6"	6"	6"	15"	4'-4"
27-2	27"	5'-9"	5'-0"	6"	8"	15"	4'-4"
30-1	30"	3'-9"	3'-6"	6"	6"	15"	4'-4"
30-2	30"	6'-0"	5'-6"	6"	8"	15"	4'-4"
33-1	33"	4'-0"	3'-6"	6"	6"	18"	4'-9"
33-2	33"	6'-3"	6'-0"	6"	8"	18"	4'-9"
36-1	36"	4'-3"	4'-0"	6"	6"	18"	4'-9"
36-2	36"	6'-6"	6'-6"	6"	8"	18"	4'-9"
39-1	39"	4'-6"	4'-0"	6"	6"	18"	4'-9"
39-2	39"	6'-9"	7'-0"	7"	8"	18"	4'-9"
42-1	42"	4'-9"	4'-6"	6"	6"	18"	4'-9"
45-1	45"	5'-0"	5'-0"	6"	6"	18"	4'-9"
48-1	48"	5'-3"	5'-0"	6"	8"	18"	4'-9"
51-1	51"	5'-6"	5'-6"	6"	8"	18"	4'-9"
54-1	54"	5'-9"	5'-6"	6"	8"	18"	4'-9"
57-1	57"	6'-0"	6'-0"	6"	8"	18"	4'-9"
60-1	60"	6'-3"	6'-0"	6"	8"	18"	4'-9"

NOTES

Structures are numbered to designate pipe diameter in inches followed by a second number, -1 or -2, which designate maximum allowable pipe velocities of 5 and 12 feet per second respectively. Structures -1 and -2 may also be used for maximum allowable pipe velocities of 3.5 and 10 feet per second respectively. Structure number 30-2 is for a 30 inch diameter pipe having a maximum allowable velocity of either 10 or 12 feet per second

Figure 4-12
Typical Rectangular Chutes
(Source: US Bureau of Reclamation, Design of Small Canal Structures, 1987)

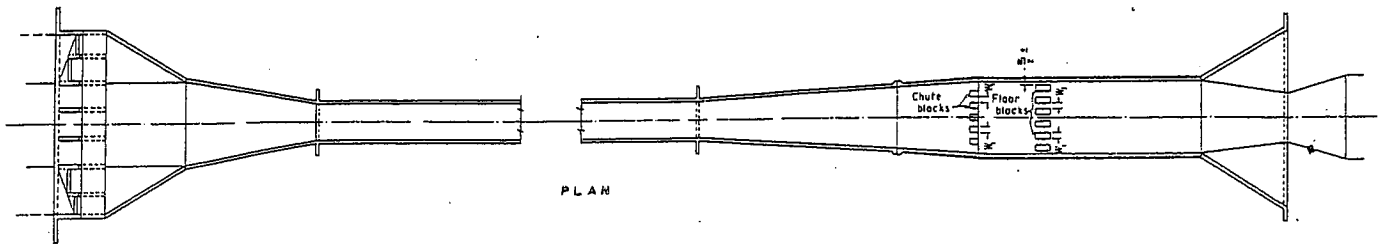

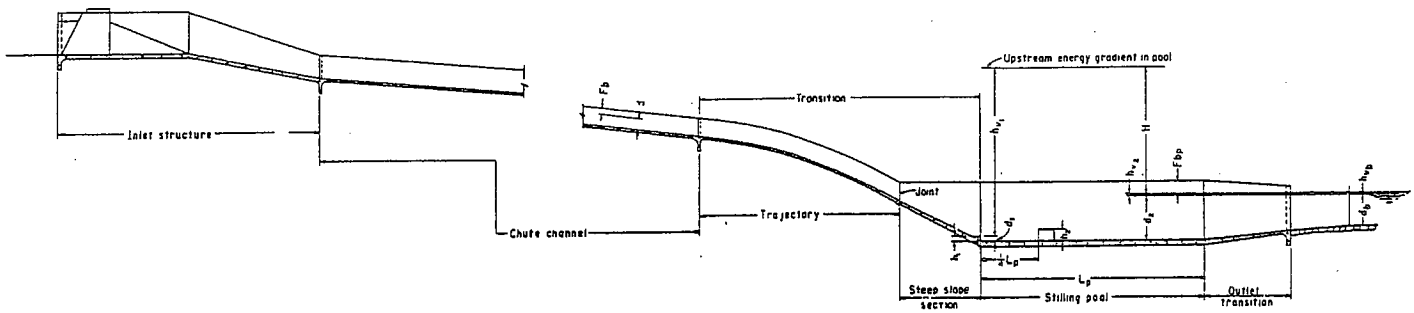

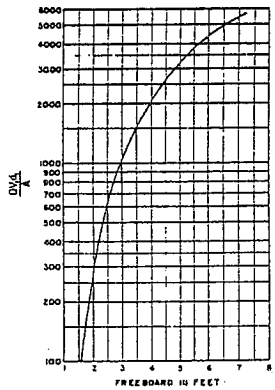

CURVE FOR FREEBOARD IN STILLING POOL

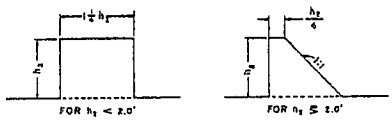

SHAPE OF TYPICAL POOL FLOOR BLOCKS

EXPLANATION

A_1.....Area of water prism at beginning of the hydraulic jump.
d_1.....Computed depth at beginning of hydraulic jump
h_{v_1}.....Velocity head at beginning of hydraulic jump
d_2.....Depth at end of hydraulic jump.
h_{v_2}.....Velocity head at end of hydraulic jump.
d_b.....Normal water depth in canal or channel downstream.
h_{v_b}.....Velocity head for canal or channel downstream
d_c.....Maximum computed water depth in chute channel.
h_1.....Height of chute blocks, usually set equal to d_1.
h_2.....Height of floor blocks in pool, usually set equal to $\frac{1}{2}d_2$ for d_2 from 0' to 8'; then vary uniformly formly from $\frac{1}{2}d_2$ to $\frac{1}{3}d_2$ for values of d_2 from 8' to 24'; $\frac{1}{3}d_2$ for d_2 greater than 24. Minimum h_2 equals 8".
V_1.....Velocity at the beginning of the hydraulic jump.
W_1.....Width and spacing of chute and pool floor blocks, usually set equal to d_1 with 8" minimum.
L_p.....Length of stilling pool.
Fb_p.....Freeboard in stilling pool. (See curve.)
Fb.....Freeboard in chute
H.....Energy loss in hydraulic jump

Figure 4-13
Stilling Pool on Pipe Chute
(Source: US Bureau of Reclamation, Design of Small Canal Structures, 1987)

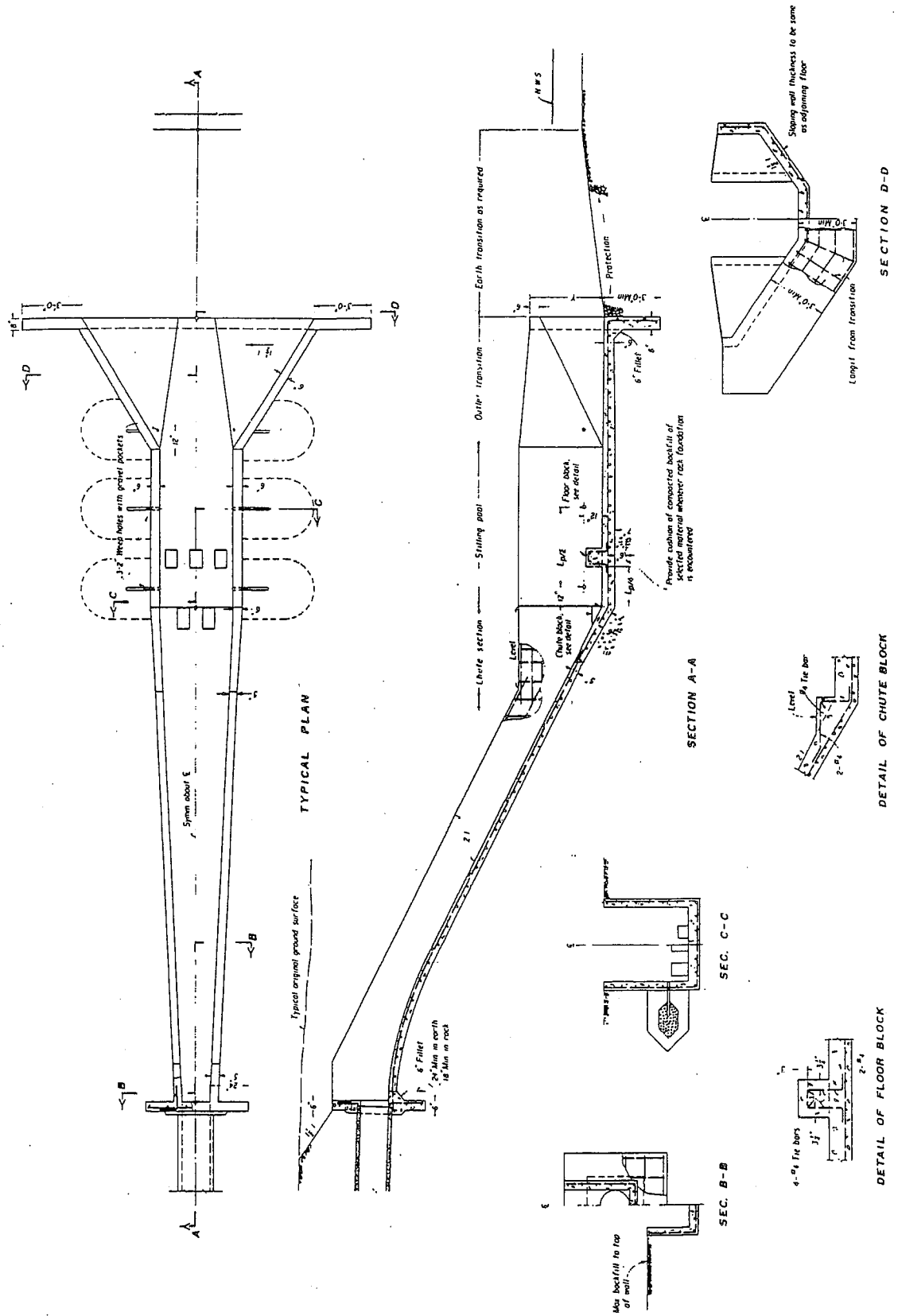

Figure 4-15
Channel Transition Types
(Source: Hydraulic Engineering Ccircular No. 14, Hydraulic Design of Energy Dissipators for Culverts and Channels 1983)

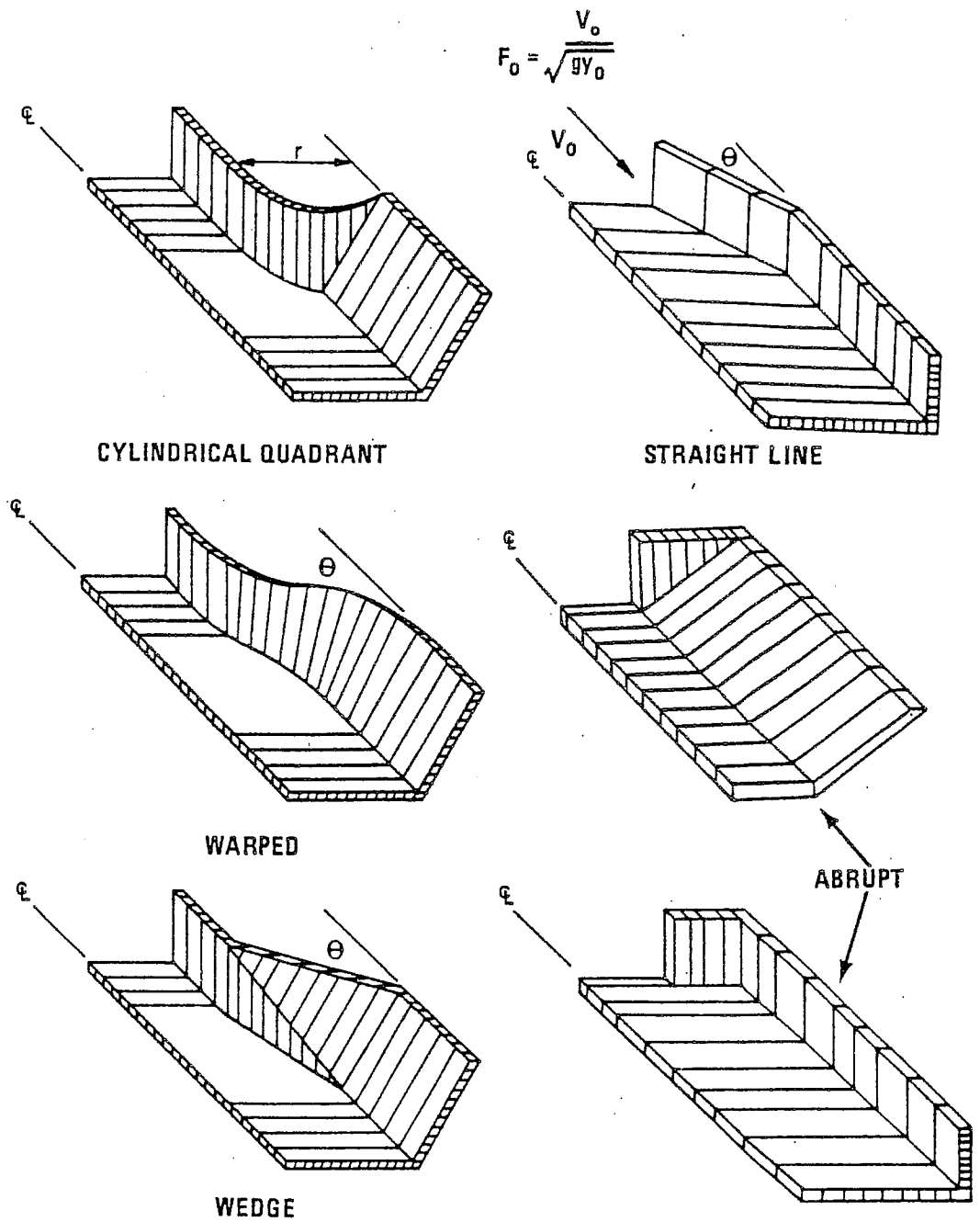

Figure 4-16
Maximum Stone Size in Riprap Mixture
(Source: US Bureau of Reclamation, Hydraulic Design of Stilling Basins and Energy Dissipators, 1984)

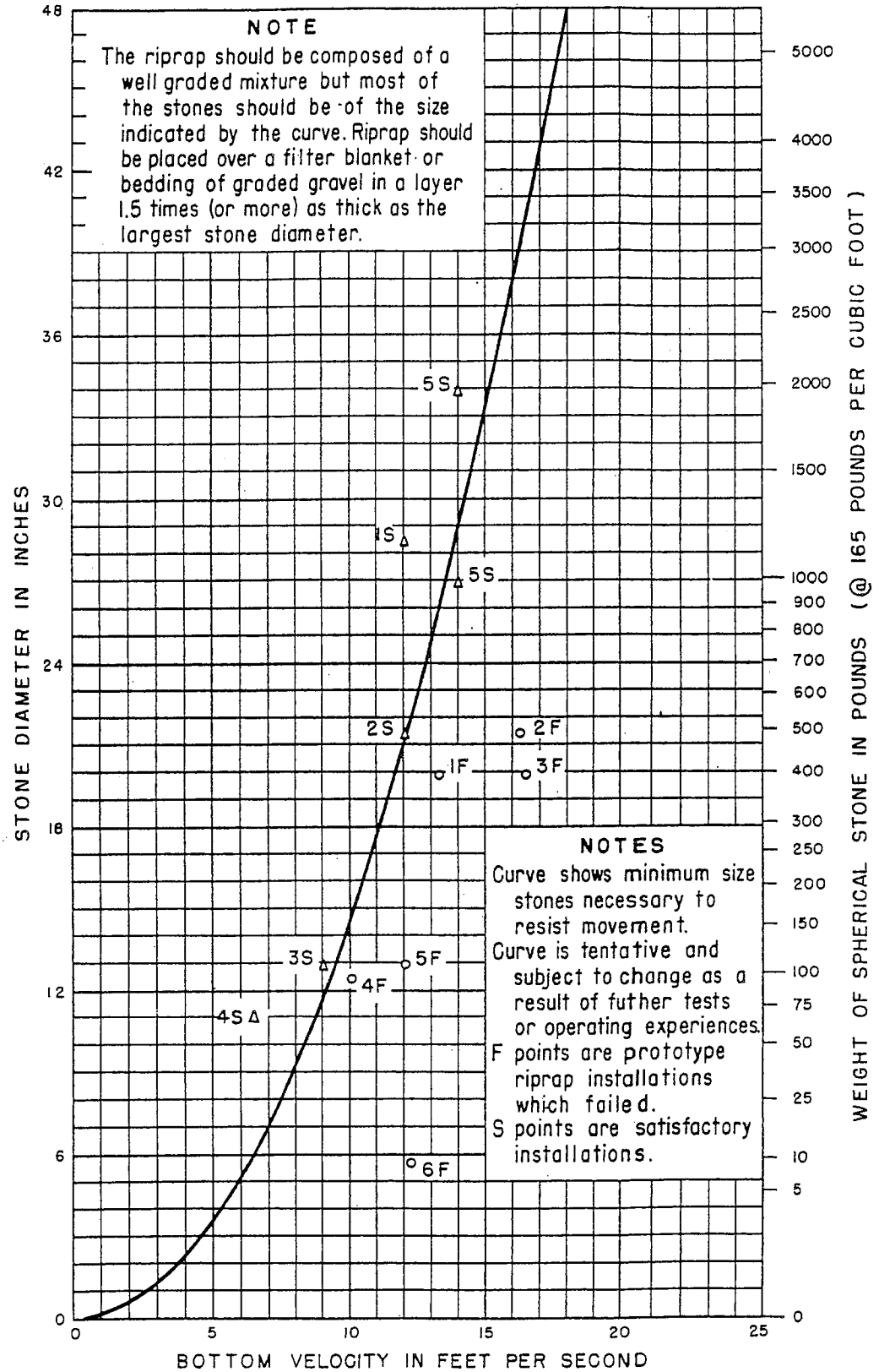

Figure 4-17
Design Values for Roughness Elements for Energy Dissipation Basin
(Source: Hydraulic Engineering Circular No. 14, Hydraulic Design of Energy Dissipators for Culverts and Channels, 1983))

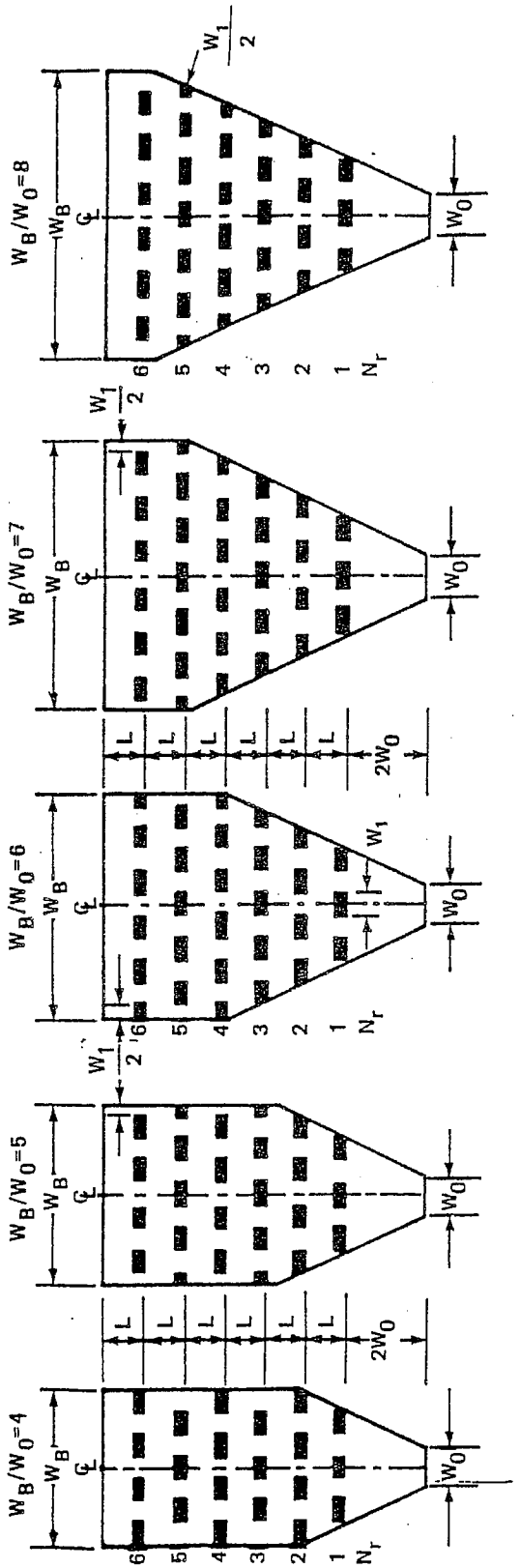

W_B/W_0		2 TO 4			5			6			7			8	
W_1/W_0		.57			.63			.6			.58			.62	
NO. ROWS (N_r)		4	5	6	4	5	6	4	5	6	5	6		6	
NO. ELEMENTS (N)		14	17	21	15	19	23	17	22	27	24	30		30	
	h/Y_A	L/h	C_B FOR ROUGHNESS ELEMENT DISSIPATORS												
RECTANGULAR	0.91	6	0.32	0.28	0.24	0.32	0.28	0.24	0.31	0.27	0.23	0.26	0.22	0.22	
	0.71	6	0.44	0.40	0.37	0.42	0.38	0.35	0.40	0.36	0.33	0.34	0.31	0.29	
	0.48	12	0.60	0.55	0.51	0.56	0.51	0.47	0.53	0.48	0.43	0.46	0.39	0.35	
	0.37	12	0.68	0.66	0.65	0.65	0.62	0.60	0.62	0.58	0.55	0.54	0.50	0.45	
CIRCULAR	0.91	6	0.21	0.20	0.48	0.21	0.19	0.17	0.21	0.19	0.17	0.18	0.16		
	0.71	6	0.29	0.27	0.40	0.27	0.25	0.23	0.25	0.23	0.22	0.22	0.20		
	0.31	6	0.38	0.36	0.34	0.36	0.34	0.32	0.34	0.32	0.30	0.30	0.28		
	0.48	12	0.45	0.42	0.25	0.40	0.38	0.36	0.36	0.34	0.32	0.30	0.28		
	0.37	12	0.52	0.50	0.18	0.48	0.46	0.44	0.44	0.42	0.40	0.38	0.36		

Table 4-16
Length Ratio of Basin for Specified Velocity Reduction Ratio

$$\frac{L}{D} \text{ for } \frac{V_c}{V_p} = 0.5$$

$\frac{Q}{D^{2.5}}$	D/d				
	8	6	4	3	2
1.00	9.10	8.65	8.00	7.75	6.90
1.25	8.95	8.50	7.85	7.60	6.75
1.50	8.80	8.35	7.70	7.45	6.65
1.75	8.70	8.25	7.60	7.30	6.50
2.00	8.50	8.15	7.50	7.20	6.40
2.25	7.70	8.00	7.30	7.00	6.25
2.50	7.45	7.85	7.15	6.90	6.10
2.75		7.60	7.05	6.75	5.95
3.00		7.30	6.90	6.60	5.85
3.25		7.05	6.80	6.45	5.70
3.50		6.90	6.65	6.30	5.60
3.75		6.70	6.45	6.20	5.45
4.00		6.55	6.25	6.05	5.35
4.25		6.40	6.10	5.95	5.20
4.50			6.00	5.70	5.05
4.75			6.00	6.00	4.95
5.00			6.00	6.00	4.80
5.25			6.00	6.00	4.20
5.50			6.00	6.00	4.00
5.75			6.00	6.00	4.00
6.00				6.00	4.00
6.25				6.00	4.00
6.50					4.00
7.00					4.00
7.50					6.00
8.00					6.00

Table 4-17
Length Ratio of Basin for Specified Velocity Reduction Ratio

$$\frac{L}{D} \text{ for } \frac{V_c}{V_p} = 0.4$$

$\frac{Q}{D^{2.5}}$	D/d				
	8	6	4	3	2
1.00	10.95	10.35	9.60	9.40	9.05
1.25	10.85	10.15	9.45	9.20	8.90
1.50	10.70	10.00	9.35	9.10	8.75
1.75	10.55	9.85	9.20	9.00	8.55
2.00	10.30	9.75	9.10	8.85	8.40
2.25	9.75	9.55	9.00	8.70	8.25
2.50	9.60	9.40	8.85	8.60	8.05
2.75		9.30	8.75	8.45	7.95
3.00		9.20	8.60	8.35	7.75
3.25		9.15	8.50	8.15	7.55
3.50		9.05	8.40	8.05	7.40
3.75		9.05	7.85	7.90	7.20
4.00		8.95	7.50	7.75	7.05
4.25		8.85	7.25	7.65	6.90
4.50			7.35	7.00	9.75
4.75			6.80	7.05	6.55
5.00			6.65	6.80	6.40
5.25			6.45	6.30	6.10
5.50			6.35	6.10	5.85
5.75			6.30	6.00	5.70
6.00				6.00	5.45
6.25				6.00	5.30
6.50					5.15
7.00					4.80
7.50					6.00
8.00					6.00

Table 4-18
Length Ratio of Basin for Specified Velocity Reduction Ratio

$\frac{L}{D}$ for $\frac{V_c}{V_p} = 0.3$

$\frac{Q}{D^{2.5}}$	D/d				
	8	6	4	3	2
1.00	12.80	11.90	11.20	10.85	10.65
1.25	12.65	11.90	11.20	10.85	10.65
1.50	12.50	11.55	10.95	10.75	10.30
1.75	12.35	11.45	10.85	10.65	10.10
2.00	12.10	11.25	10.70	10.50	10.00
2.25	11.85	11.05	10.60	10.35	9.80
2.50	11.80	10.95	10.45	10.25	9.65
2.75	11.75	10.80	10.30	10.10	9.50
3.00		10.70	10.20	9.95	9.30
3.25		10.65	10.10	9.80	9.10
3.50		10.60	10.00	9.65	9.00
3.75		10.60	9.40	9.50	8.80
4.00		10.50	9.10	9.45	8.65
4.25		10.40	8.85	9.30	8.50
4.50			8.60	9.00	8.30
4.75			8.40	8.80	8.15
5.00			8.20	8.35	7.95
5.25			8.05	7.90	7.65
5.50			7.95	7.75	7.40
5.75			7.90	7.60	7.20
6.00				7.50	7.05
6.25				7.40	6.90
6.50					6.75
7.00					6.40
7.50					6.00
8.00					6.00

CITY OF RAPID CITY

INFRASTRUCTURE DESIGN CRITERIA

SECTION FIVE

GRADING REQUIREMENTS

Section Five Grading

5.1 Grading Permits

5.1.1 Grading Permits Required

A Grading Permit is required in accordance with Chapter 15.12 of the Rapid City Municipal Code (RCMC) for all work involving grading, excavation, or earthwork within the City of Rapid City, unless exempted. Grading Permits are applicable and issued for work on private property.

5.1.2 Work in Streets or Rights-of-Way

Any work within public streets or rights-of-way shall be in accordance with a separate right-of-way work permit issued by the City of Rapid City per §12.08.040 RCMC.

5.1.3 Exempt Work

Grading permits are not required for the following situations:

1) Grading incidental to and identified in plans submitted for construction of a structure for which a building permit has been issued under the International Building Code or the One and Two Family Residential Code, as adopted by the City of Rapid City, including excavation for structures covered by the building permit.
2) Grading in an isolated, self-contained area, provided the total amount of grading does not exceed 15 cubic yards, there is no danger to the public, and that such grading will not adversely affect adjoining properties.
3) Cemetery graves.
4) Refuse disposal sites controlled by other regulations.
5) Excavations for wells.
6) Utility trenches.
7) Mining, quarrying, excavating, processing or stockpiling of rock, sand, gravel,aggregate, or clay under regulations of other authorities, such as the State of South Dakota, provided that such operations do not affect the lateral support of, or significantly increase stresses in, soil on adjoining properties.
8) Exploratory excavations performed under the direction of a registered design professional, such as soil borings or test pits. Any pits, borings, or excavations should be suitably backfilled or plugged following completion of tests, sampling, or observations.

Interpretations of applicability of exemptions or the need for a Grading Permit will be made by the City Building Official. In evaluating exemptions, factors such as location of the work relative to other properties, quantity of earthwork to be performed, size of the disturbed area, impact on public right-of-way or infrastructure, steep grades or slopes on the property, theexistence of stability or soil problems in the vicinity, and drainage impacts will be considered.

5.1.4 Grading Permit Requirements

Applications for Grading Permits shall be made to the City of Rapid City Growth Management Department, Development Services Division, on forms available from that office. Up to 2 weeks from the date of submittal of all required Engineering data may be required for administrative review before a grading permit will be issued.

Applications shall include the following information:

1) A site plan prepared by a registered Engineer, showing to scale the property on which the work is to be performed; the location of the proposed grading work on the property; existing and proposed finished grades, with contours at intervals appropriate to the nature and intent of the work and the site (generally the interval between contours should be a minimum of 1 foot, and maximum of 5 feet); any existing structures or improvements on the site; lot lines; any easements located on the property such as for drainage, utility, or access; any wetlands or floodplains located on or immediately adjacent to the property; and distance from lot lines to the work location(s). A registered landscape Architect may prepare the data required when the grading permit is for a recreational facility.

2) A soils report prepared by a registered soils Engineer identifying the nature and distribution of existing soils; conclusions and engineering recommendations for grading procedures; soil design criteria for any structures or embankments required to accomplish the proposed grading; and, where necessary, slope stability studies, and recommendations and conclusions regarding site geology.

3) An analysis of site drainage prepared by a registered Engineer, demonstrating that the discharge rate of runoff from the site will not exceed that which existed prior to grading, and the anticipated flows and capacity of all conveyance facilities transporting or receiving the runoff.

4) Sediment and erosion control plans showing temporary and permanent measures (best management practices) to stabilize the site and prevent sediment discharge during and after completion of the grading activities. The best management practices may include structural or vegetative measures, and must be appropriate for all stages of the grading work through final stabilization. Failure to implement and maintain best management practices or stabilization measures may result in a violation of the permit conditions.

5) Location(s) of off-site sources for fill or waste sites, proposed haul routes and proposed locations for access to public streets, highways, or rights-of-way.

5.1.5 Other Permits

Issuance of a grading permit by the City of Rapid City shall not relieve the permit holder from any obligation to determine the need for and to obtain permits from other agencies having jurisdiction, such as the City of Rapid City Air Quality Program, the South Dakota Department of Environment and Natural Resources, the US EPA, the US Army Corp of Engineers, etc. A permit does not give authority to violate, cancel, or set aside any of the provisions of the building code, zoning ordinances, or any other local law or ordinance regulating construction or the performance of construction in the City of Rapid City. A grading permit does not include authorization for construction of retaining walls or other structures which may require a separate Building Permit from the City.

5.1.6 Permit Expiration and Renewal

Permits shall be valid for the calendar year in which they are issued, except permits issued after October 1 may be issued through the end of the following calendar year at the applicants request. Permits must be maintained in force until completion of the work, including installation of permanent stabilization measures as identified in the sediment and erosion control plan for the work and removal of temporary sediment control measures, such as silt fences.

Upon written request of the applicant, permits may be renewed up to two (2) times for a succeeding calendar year. Application for renewal must be made not later than 3 months after expiration of the permit. Renewal will be contingent upon determination following a review of the site by city staff that the work has been continuing to progress through the prior permit period, that the work is being performed consistent with the plans and information originally submitted, and that proper measures for stabilization and erosion control are being incorporated into the work. After the second renewal, a new permit application will be required.

5.2 Design Standards

5.2.1 Setbacks

All cut or fill slopes shall be setback from property lines at least 2 feet. Where the vertical height of the cut or fill slope is greater than 10 feet, or where interceptor drains are required by the building code above cut slopes, additional setback shall be required. (Refer to Figure J108.1 of the International Building Code).

Where setbacks from property line to the location of the work will be less than that specified above, or the grading work will extend across lot lines, written evidence from affected property owners (i.e. the owners of all lots on which grading is taking place, as well as the owner of lots adjacent to areas of reduced setback) shall be submitted prior to issuance of a permit to demonstrate concurrence with and authorization for the proposed grading work.

5.2.2 Surface Preparation

Surfaces to receive fills shall be prepared by removing all vegetation, topsoil and unsuitable materials, and scarifying the exposed surface to a depth of at least 8 inches. Fill shall not be placed on frozen ground.

5.2.3 Benches and Keys

Where existing ground surfaces to receive fill are steeper than 5 (horizontal) to 1 (vertical), and the depth of fill will exceed 5 feet (vertical measurement from toe of slope to crest of fill), the exposed surface shall be benched and a key provided at the toe of the slope. The toe key shall be at least 10 feet wide and 2 feet deep. Slopes on benches shall generally be no greater than 5%. Where recommended by a soils engineer based on analysis alternative standards may be approved.

5.2.4 Maximum Slope

Cut or Fill slopes may be no steeper than 2 (horizontal) to 1 (vertical) unless use of steeper slopes is analyzed and recommended by a soils engineer. Recommendations for steeper slopes shall include applicable stabilization measures.

5.2.5 Compaction and Oversized Materials

All fill shall be compacted to at least 90% of the maximum density as determined by Modified Proctor (ASTM D1557). No rock or similar irreducible material larger than 12 inches in any dimension, nor any frozen material, shall be included in fills. Alternative compaction specifications shall be subject to justification based on soils reports or other engineering data.

5.2.6 Inspection

Inspection of the work shall be the responsibility of the permit holder.

The City of Rapid City may require the Owner or the Registered Design Professional responsible for the work to provide inspection, in accordance with Section 1704 of the International Building Code, to review site preparation, placement of fills, and evaluation of in-place density per Section 1704.7 of the International Building Code. Generally, evaluation of in-place density shall provide one test for each 200 cubic yard of fill placed per 1 foot of fill height.

Submittal of written reports of inspections and test performed in accordance with this section may be required.

End of section