06SR029

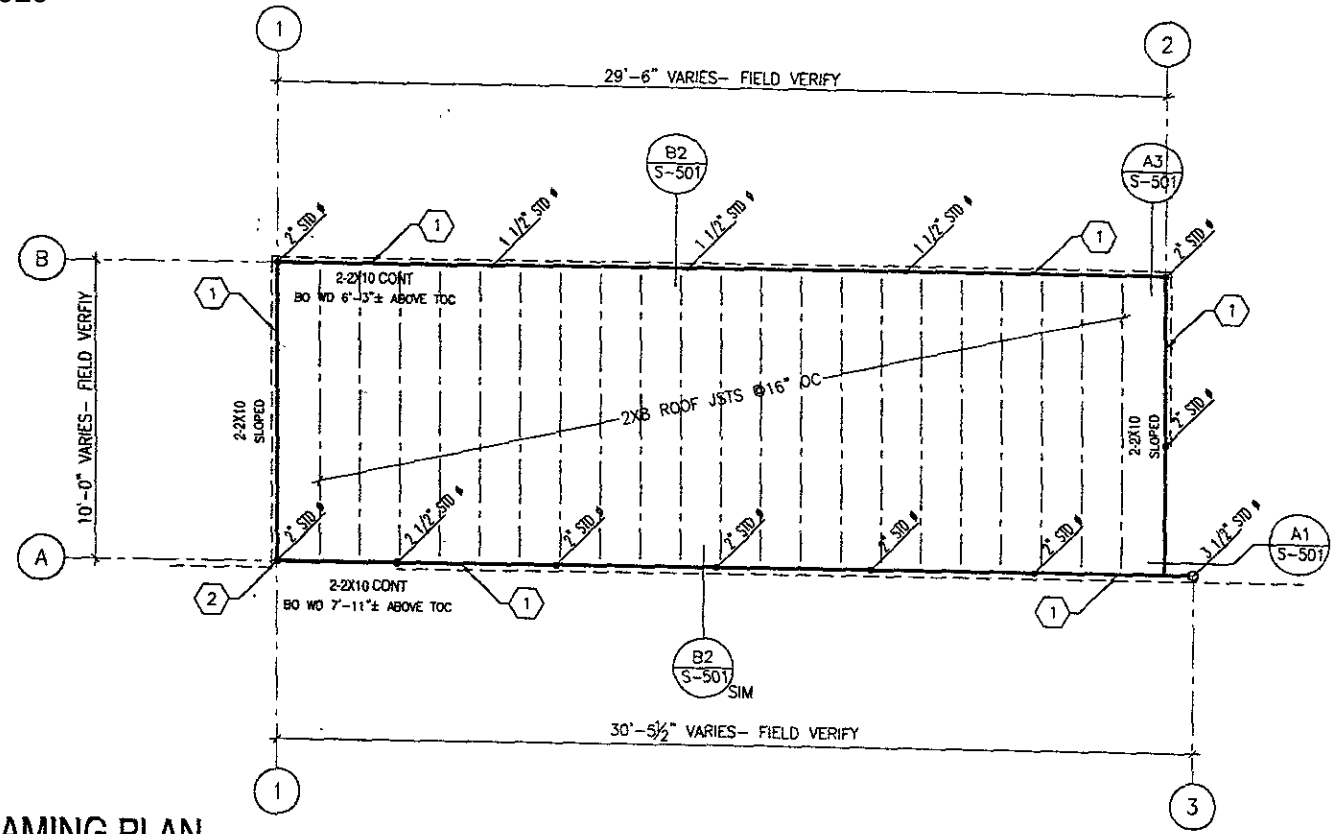

A1 FRAMING PLAN

06SR029

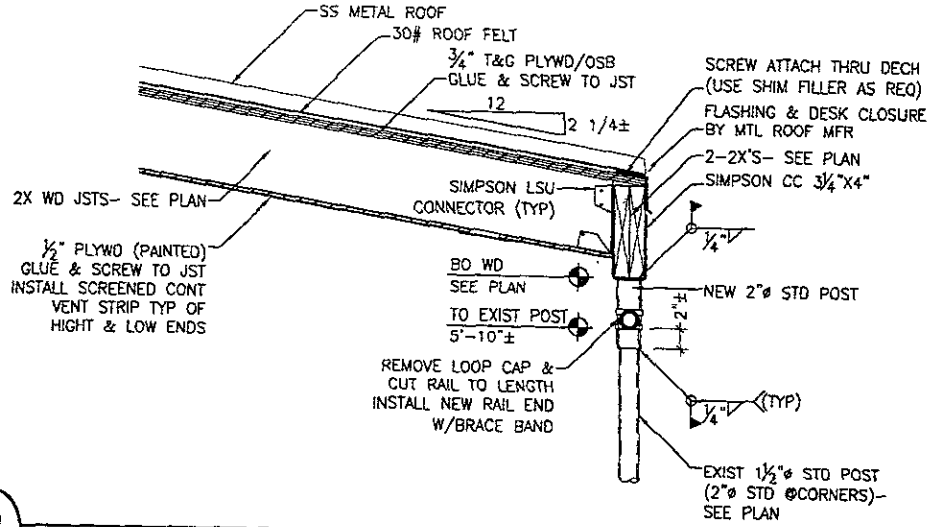
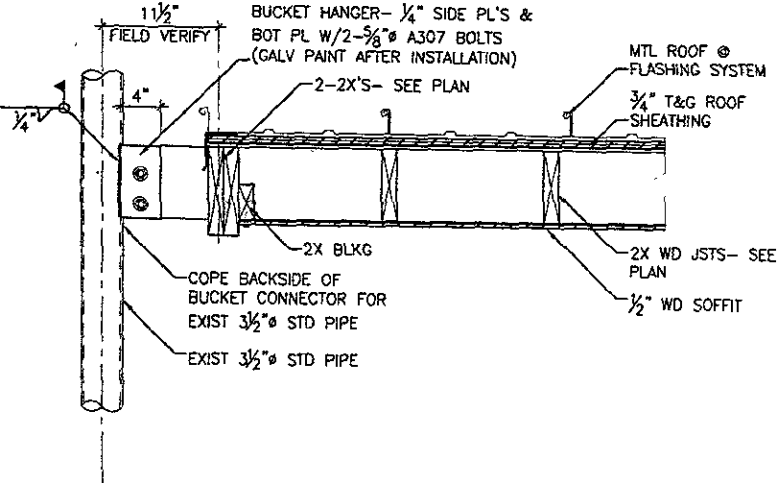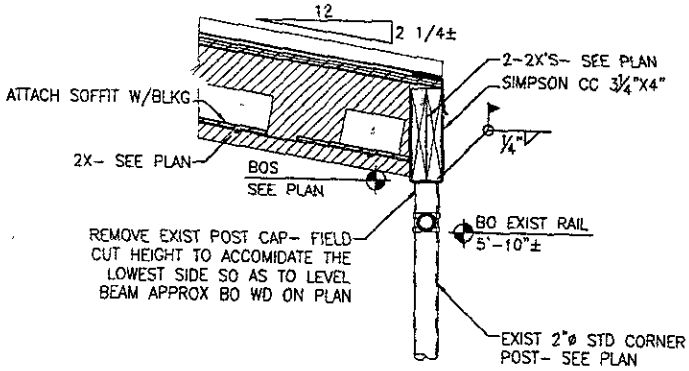
B2 SCALE: 1" = 1'-0"