06SR022

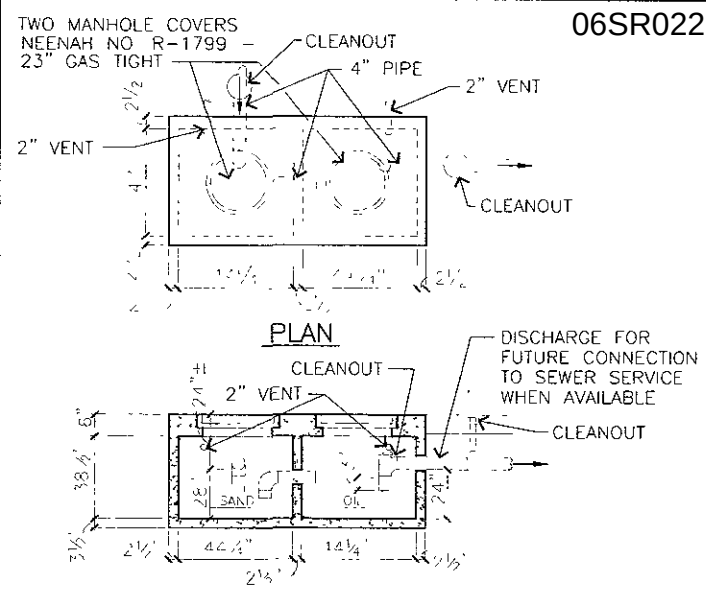

OIL & SAND INTERCEPTOR DETAIL

2/3

SCALE: N.T.S

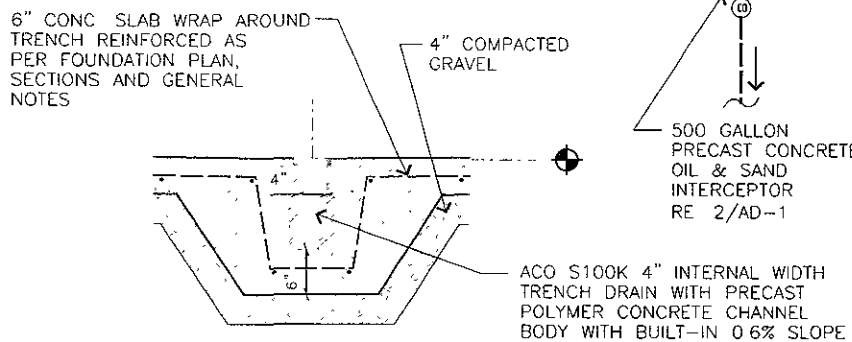

TRENCH DRAIN DETAIL

3/3

SCALE: N.T.S.

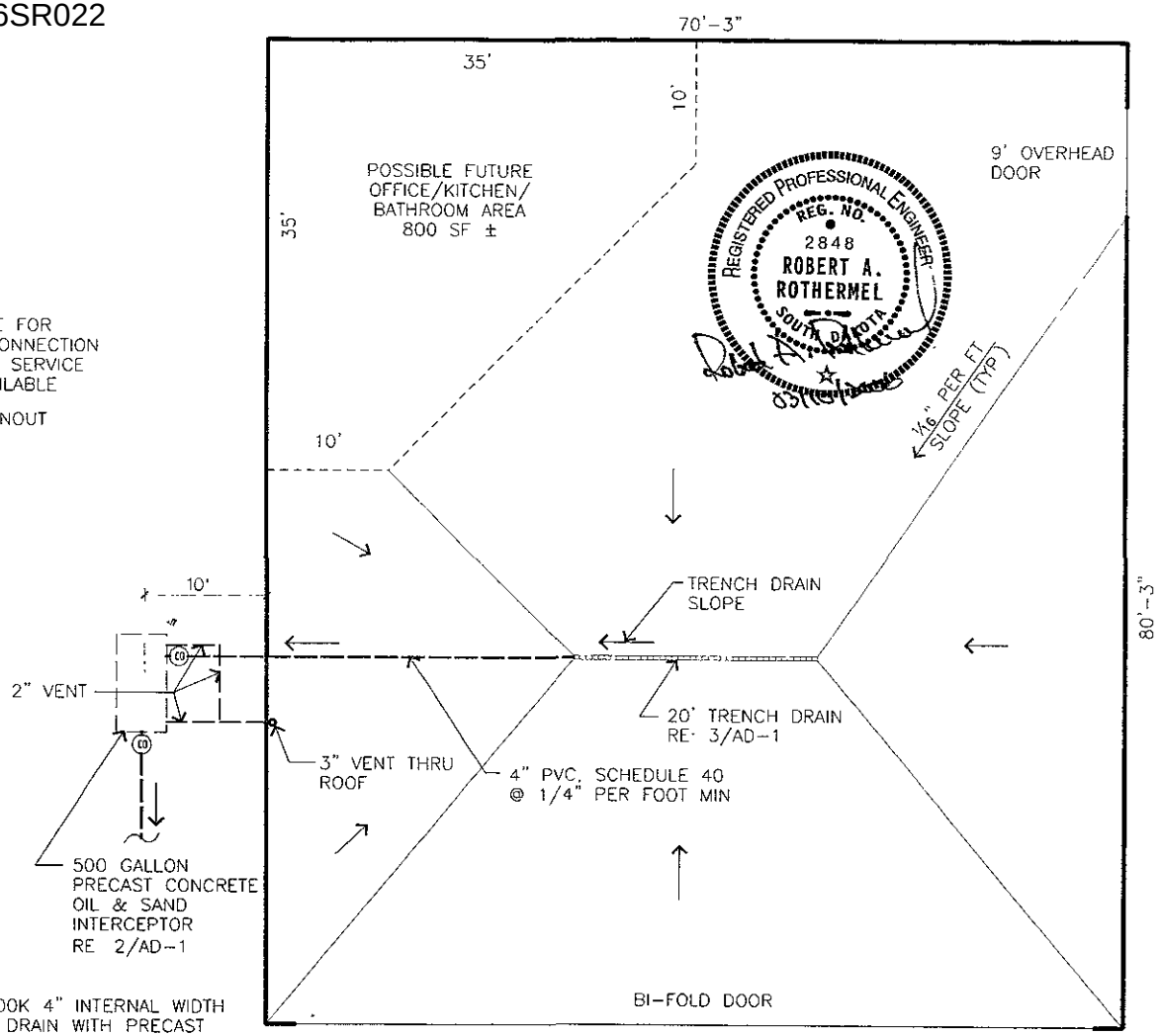

FLOOR PLAN-TRENCH DRAIN AND OIL/SAND INTERCEPTOR

1/3
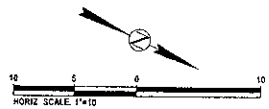
SCALE: 1" = 10'-0"