DIMENSIONS - ENGLISH

UNIT	SERIES	ELECTRICAL CHARACTERISTICS				A	B	C	D	E	F	G	K	L	M	N	P	OPERATING WEIGHT (lbs)	SHIPPING WEIGHT (lbs)	SHIPPING DIMENSIONS (L x W x H)
113A018	D	X	O	O	O	23 1/8"	25 5/16"	3 3/4"	3/4"	4 7/16"	18 1/16"	7 13/16"	2 13/16"	1/2"	16 1/2"	15"	12"	107	130	24 1/4" X 27 3/8" X 33 1/2"
113A024	D	X	O	O	O	23 1/8"	25 5/16"	3 3/4"	3/4"	4 7/16"	18 1/16"	7 13/16"	2 13/16"	1/2"	16 1/2"	15"	12"	110	134	24 1/4" X 27 3/8" X 33 1/2"
113A030	E	X	O	X	O	23 1/8"	28 11/16"	3 3/4"	3/4"	4 7/16"	18 1/16"	7 13/16"	2 13/16"	1/2"	16 1/2"	15"	14"	111	136	24 1/4" X 27 3/8" X 33 1/2"
113A036	E	X	O	X	X	25 3/4"	32 5/16"	3 7/8"	7/8"	4 7/16"	21 1/4"	9 1/8"	2 15/16"	5/8"	14 1/4"	10 1/2"	16"	141	170	26 7/8" X 30 1/16" X 35 15/16"
113A042	C	X	O	X	X	31 3/16"	32 5/16"	3 7/8"	7/8"	6 9/16"	24 11/16"	9 1/8"	2 15/16"	5/8"	15 3/4"	16 1/4"	13 3/4"	189	217	32 3/8" X 35 1/2" X 35 15/16"
113A048	E	X	O	X	X	31 3/16"	35 3/4"	3 7/8"	7/8"	6 9/16"	24 11/16"	9 1/8"	2 15/16"	5/8"	16 3/8"	15 3/8"	15 1/4"	186	224	32 3/8" X 35 1/2" X 39 3/8"
113A060	F	X	O	O	O	31 3/16"	25 1/2"	3 7/8"	7/8"	6 9/16"	24 11/16"	9 1/8"	2 15/16"	5/8"	14 1/8"	15 3/8"	11 3/4"	190	226	32 3/8" X 35 1/2" X 32 9/16"
113A060	G	O	O	X	X	31 3/16"	28 15/16"	3 7/8"	7/8"	6 9/16"	24 11/16"	9 1/8"	2 15/16"	5/8"	16"	15 1/2"	12 3/4"	198	230	32 3/8" X 35 1/2" X 32 9/16"
		208-230-1-60	575	208/230-3-60	460-3-60															

X = YES
O = NO

NOTES:
1. ALLOW 24" CLEARANCE TO SERVICE END OF UNIT, 48" ABOVE UNIT, 6" ON ONE SIDE, 12" ON REMAINING SIDE, AND 18" BETWEEN UNITS FOR PROPER AIRFLOW.
2. MINIMUM OUTDOOR OPERATING AMBIENT IN COOLING MODE IS 55°F, MAX. 125°F.
3. SERIES DESIGNATION IS THE 14TH POSITION OF THE UNIT MODEL NUMBER.
4. CENTER OF GRAVITY ⊕.
5. ALL DIMENSIONS ARE IN "INCHES" UNLESS NOTED.

LENGTH A = 23 1/8"

HIEGTH B = 25 5/16"

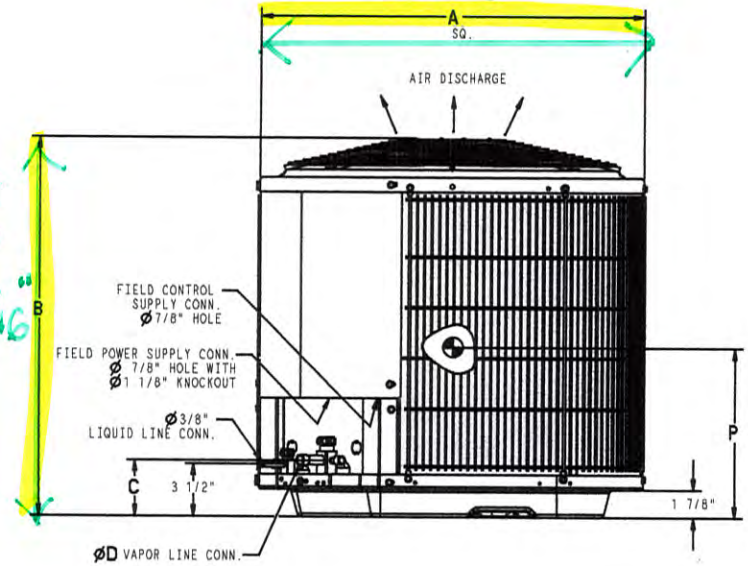

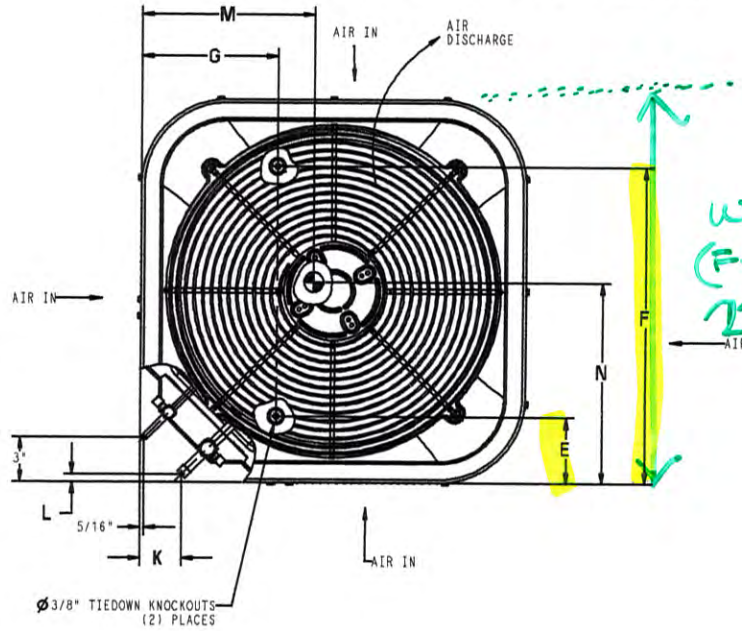

WIDTH (F+E) = 22 1/2"

UNIT SIZE	MINIMUM MOUNTING PAD DIMENSIONS
18,24,30	23 1/2" X 23 1/2"
36	26" X 26"
42, 48, 60	31 1/2" X 31 1/2"
-	35" X 35"

ACTUAL A/C UNIT DIM (L x W x H) = 23 1/8 x 22 1/2 x 25 5/16 INCHES

= 1.927 x 1.875 x 2.109 FEET